2019 Illustrated Parts List Tempo, Tempo Connect and Tempo 2+2 Lithium-Ion

Lithium-Ion Vehicle

Manual Number 105355026
Edition Code A

MASTERS

GOLF & UTILITY VEHICLES

www.mastersgolfcarts.com - 905-436-0606 - 1-855-226-0606

USING THE ILLUSTRATED PARTS LIST

⚠ WARNING

- **This manual is to be used only for identification and ordering of service parts. Be sure to read and use the maintenance and service manual before attempting any vehicle repairs.**

The manual is divided into several sections. Note that there are two flags on the outside edge of each page. The first flag contains the section number of which that page is a part. The other flag contains the letter E signifying that the page pertains to lithium-ion electric vehicles.

Use the Table of Contents to find the sections and pages that contain the parts and assemblies you seek. The Table of Contents lists section numbers, and under them, the individual page titles and numbers to be found in that section. The index can be used to find specific parts and assemblies. The index is divided into numerical and alphabetical listings with the page numbers in italic text.

There is a two-page spread for each individual page title in the Table of Contents. On the left-hand page is an illustration showing the parts in their relative positions; the parts are each tagged with an item number in a balloon. The right-hand page is the parts list page, and gives the page title at the top, then the item numbers (corresponding to the numbers on the illustration), part descriptions, and quantity of parts used. Some item numbers have more than one part number because several configurations of a component are represented together on one spread.

Note that a part description may be indented. This indention corresponds to a parts assembly level indicated by the numbers 1, 2, 3, and 4 at the top left corner of the parts description area of the parts list page. A part that is indented to *level 2* is a component of the *level 1* part (assembly) that it is listed under. A *level 3* part is a component of the *level 2* part that it is listed under, and a *level 4* part is a component of the *level 3* part preceding it. In each case, the part quantity given for a level 2, 3, or 4 part *is the quantity used per next higher level assembly of which it is a component.* A part that is not indented is a *level 1* part. This means that the quantity given is the quantity used per the portion of the vehicle illustrated on that particular spread.

Club Car®

P. O. Box 204658
Augusta, Georgia 30917-4658 USA
Telephone 706-863-3000
Service Parts Fax 706-855-7413
www.clubcar.com

HOW TO ORDER PARTS

Replacement parts and accessories can be obtained from our network of authorized dealers and distributors. You can obtain the name and phone number of your closest authorized Club Car dealer or distributor by visiting our web site at www.clubcardealer.com, by calling our toll-free Service Parts and Technical Assistance hotline at (800) 872-2246 or (706) 863-3000, extension 3887, or by scanning this Quick Response (QR) code to be taken to the Club Car dealer locator. **Refer to Figure 1.** Download a QR code reader such as RedLaser or Barcode Scanner to your cell phone or tablet.

Figure 1 Dealer Locator QR Code

CUSTOMER SATISFACTION SURVEY

Let your voice be heard!

Please take time to participate in the Technical Publications satisfaction survey. Obtaining feedback from our customers is important to the department's continuous improvement process. The online survey takes less than five minutes and responses will help the department to examine current performance as well as identify areas for future improvement.

Our top priority is to provide timely, accurate, and user friendly manuals.

The online satisfaction survey can be found at: http://bit.ly/1w9uFMh

Figure 2 Survey QR Code

NOTE: *This illustrated parts list represents the most current information at the time of publication. Club Car, LLC is continually working to further improve its vehicles and other products. These improvements may affect the parts used to service the vehicle. Any modification and/or significant change in specifications will be forwarded to all Club Car distributors/dealers and will, when applicable, appear in future editions of this illustrated parts list.*

Club Car, LLC reserves the right to change specifications and designs at any time without notice and without the obligation of making changes to units previously sold.

Copyright © 2018 Club Car, LLC
Club Car, *Tempo, Tempo Connect, Tempo 2+2,* and *Surlyn*
are registered trademarks of Club Car, LLC
This manual effective October 1, 2018.

CONTENTS

SECTION 1 – BODY AND TRIM

Frame – 2 Passenger 1-3
Frame – 4 Passenger 1-5
Front Bumper 1-7
Front Body 1-9
Underbody Covers (Vehicle Without Canopy) 1-11
Dash 1-13
Floor Mat, Retainers, and Front Underbody 1-15
Kick Plate – On-Board Charger 1-17
Kick Plate – Shelf Charger 1-19
Seat Bottom with Hip Restraints 1-21
Seat Back, Backrest, and Structural Accessory Module (SAM) 1-23
Rear Body 1-25
Club and Ball Cleaner Kit 1-27
Sand Bottle Kits With Handles 1-29
Sand Bottle Kits 1-31
Sand Bucket Kits 1-33
Windshield – Hinged 1-35
Canopy – White 1-37
Canopy – Beige 1-39
Canopy – Black 1-41
Canopy Struts – Topped 1-43
Visage Canopy Struts and Console 1-45
Four-Passenger Monsoon Canopy 1-47
Four-Passenger Monsoon Canopy Struts 1-49
Rear Seat – Fixed 1-51
Rear Footdeck Assembly 1-53
Four Passenger Conversion Kit, Monsoon – Beige 1-55
Four Passenger Conversion Kit, Monsoon – White 1-57
Four Passenger Conversion Kit, Monsoon – Gray 1-59
5-Panel Mirror 1-61

SECTION 2 – WHEELS AND TIRES

8 Inch Wheels and Tires, Kenda 2-3
10 Inch Wheels and Tires – Champion and Pro 2-5

SECTION 3 – DECALS

Decals 3-3

CONTENTS

SECTION 4 – LIGHTS, CONTROLS AND INDICATORS

Brake Light Switch Kit 4-3
Headlights 4-5
Illuminated Logo 4-7
Turn Signal Lever And Horn 4-9
Instrument Panels 4-11
Keyswitches 4-13
DC Converter – Electric Vehicle 4-15
Visage And VDU 4-17
Taillights 4-19

SECTION 5 – BRAKES AND PEDAL GROUP ASSEMBLIES

Rear Brakes, Self-Adjusting 5-3
Brake Cables and Equalizer Bracket 5-5
Pedal Groups with MCOR 5-7

SECTION 6 – STEERING, FRONT AND REAR SUSPENSION

Steering Wheel, Comfort Grip with Clip 6-3
Steering Wheel 6-5
Steering Column 6-7
Steering Gear Assembly 6-9
Front Suspension, Upper 6-11
Front Suspension, Lower 6-13
Rear Suspension, Standard Two-Passenger 6-15
Rear Suspension, 4-Passenger – Consumer 6-17
Panhard Rod 6-19

SECTION 7 – ELECTRICAL SYSTEM – LITHIUM-ION

Motor Controller Output Regulator (MCOR) 7-3
Dynamic Braking Resistor 7-5
Wiring Harnesses and Fuses 7-7
Forward/Reverse Switch and Tow/Run Switch 7-9
Battery and Battery Bucket 7-11
Module, Controller and Solenoids 7-13
Hazard Switch and USB Port 7-15

SECTION 8 – ELECTRIC MOTOR

Electric Motor 8-3

CONTENTS

SECTION 9 – TRANSAXLE

Transaxle 9-3

SECTION 10 – BATTERY CHARGERS

IC-650 Battery Charger – Shelf 10-3
IC-900 Battery Charger – Shelf 10-5
Cords – Battery Charger, High-Frequency 10-7
IC-650 Battery Charger – Onboard 10-9
Battery Charger Cord Reels – Onboard 10-11

SECTION 11 – MAINTENANCE AND SERVICE TOOLS

Maintenance and Service Tools 11-3

SECTION i – INDEX

BODY AND TRIM

1

E

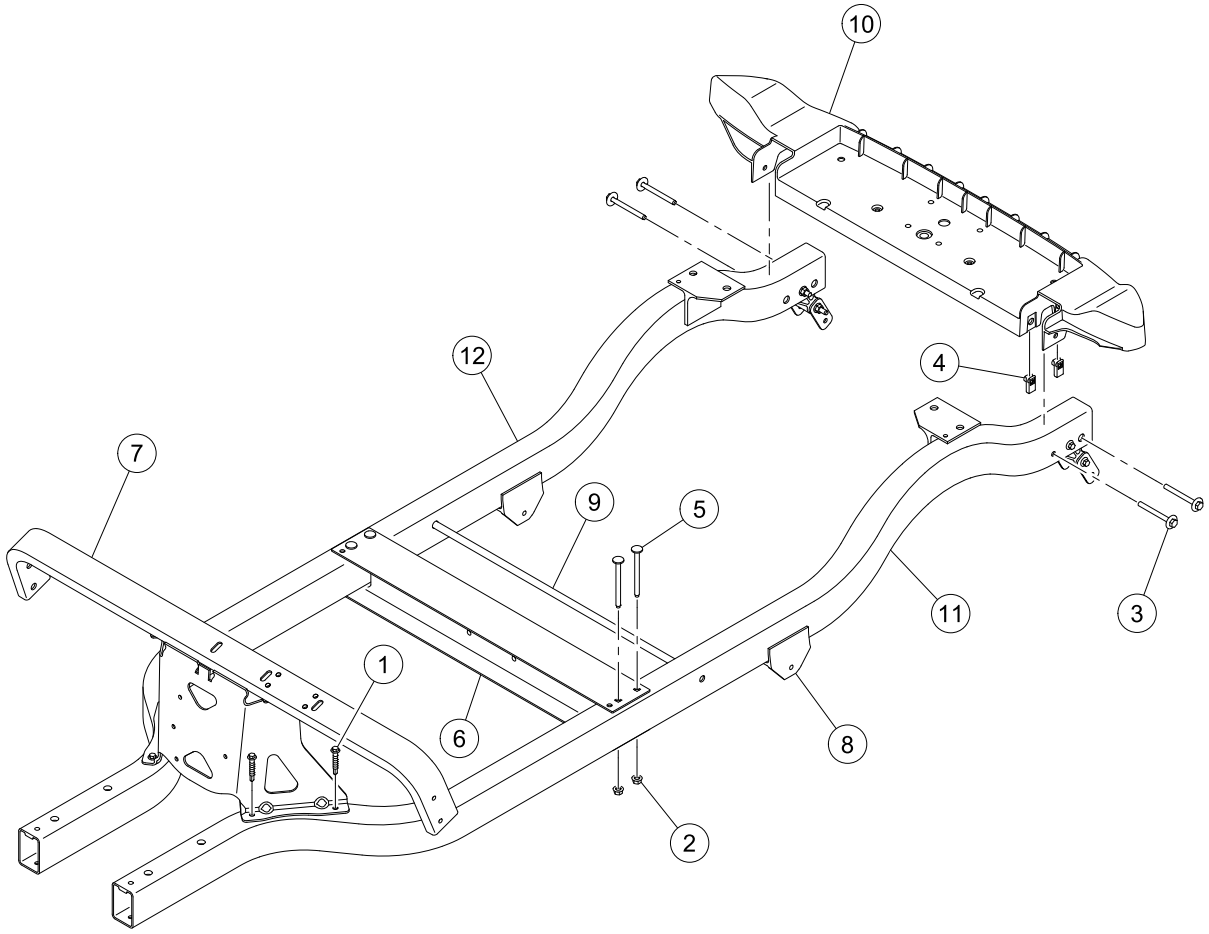

G-010099-000001

FRAME – 2 PASSENGER

ITEM	PART NO.	DESCRIPTION	QTY
		1 2 3 4	
1	102292101	Screw-5/16 X 1.5 Tek	4
2	102298401	Nut,m8,all Metal Lock	4
3	102298580	M8-1.25 X 80 Sems	4
4	102298601	J-clip - M8 X 1.25	4
5	102298995	Bolt, Wafer Head, M8-1.25x95	4
6	102505401	Xmbr-middle	1
7	102505701	Assembly, Dash Support	1
8	102507801	Hanger, Spring	2
9	103638901	Rod, .5 Od X 26.26	1
10	103926603	Rear Cross Member, Csmr, Sp	1
11	103990501	Weldment Frame, Driver Side	1
12	103990601	Weldment, Frame, Passenger-side	1

1

E

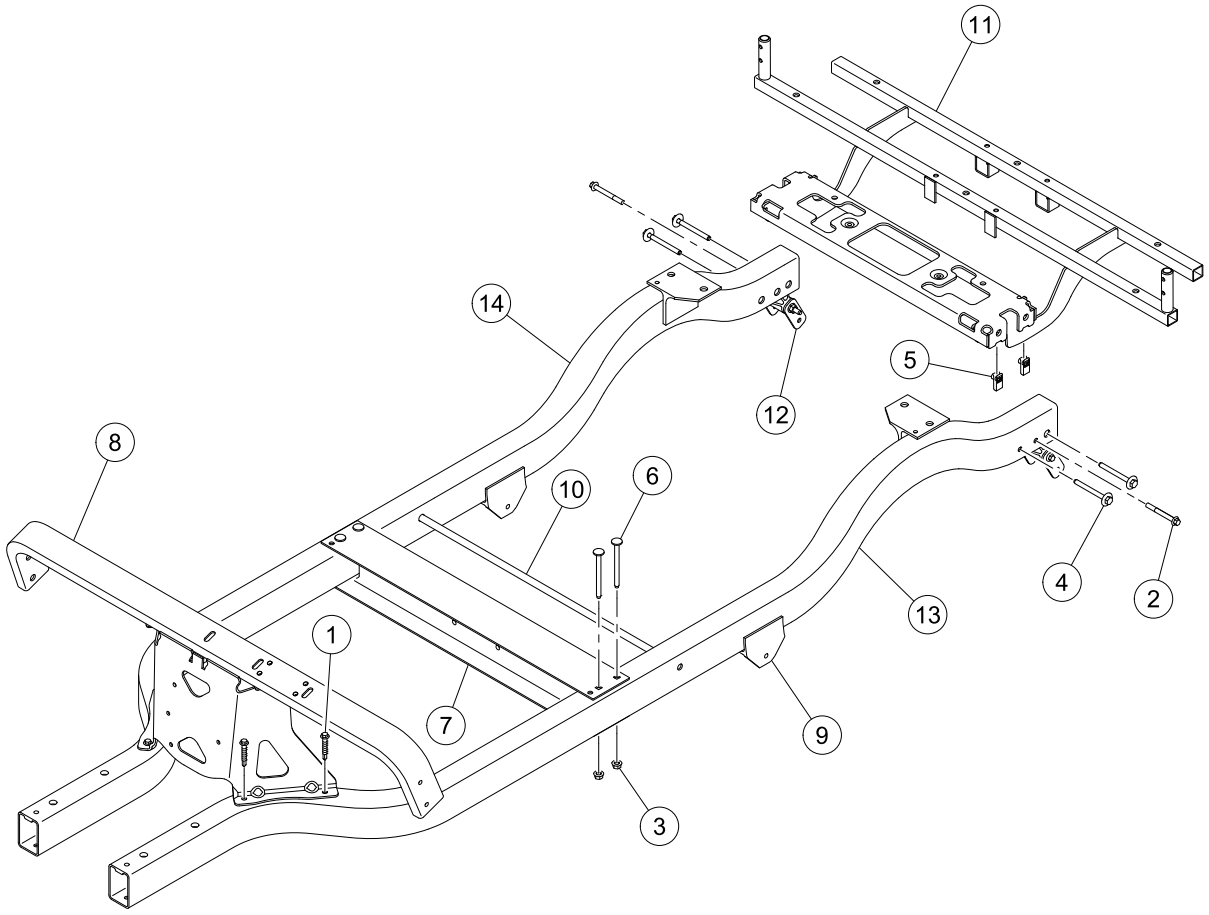

G-010099-000002

FRAME – 4 PASSENGER

ITEM	PART NO.	DESCRIPTION	QTY
		1 2 3 4	
1	102292101	Screw-5/16 X 1.5 Tek	4
2	102298175	Bolt - Flange Hd, M8 X 75.0	2
3	102298401	Nut,m8,all Metal Lock	4
4	102298580	M8-1.25 X 80 Sems	4
5	102298601	J-clip - M8 X 1.25	4
6	102298995	Bolt, Wafer Head, M8-1.25x95	4
7	102505401	Xmbr-middle	1
8	102505701	Assembly, Dash Support	1
9	102507801	Hanger, Spring	2
10	103638901	Rod, .5 Od X 26.26	1
11	103948902	Weldment, Support, 4-pass, Hs	1
12	103965001	Brkt, Shackle, Rear	4
13	103990503	Weldment, Frame, Csmr, Driver-side	1
14	103990601	Weldment, Frame, Passenger-side	1

1

E

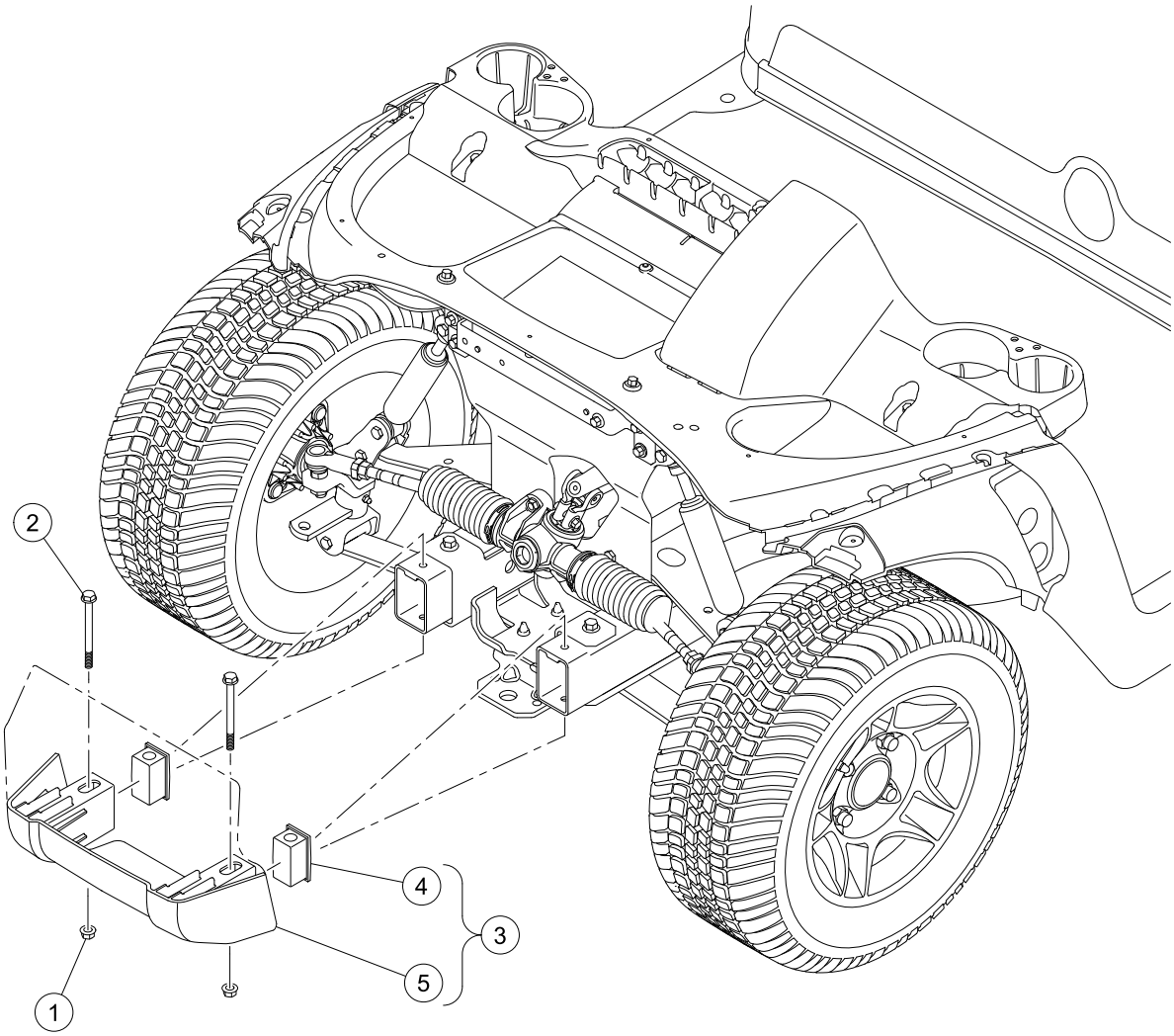

G-140199-000002

FRONT BUMPER

ITEM	PART NO.	DESCRIPTION	QTY
		1 2 3 4	
1	102298401	Nut,m8,all Metal Lock	2
2	102534201	Bolt - Fl Hd, M8 X 95	2
3	47604926001	Asm, Bumper, Front (includes items 4 and 5)	1
4	103325001	Plug, Shock, Bumper	2
5	47589918001	Bumper, Front	1

1

E

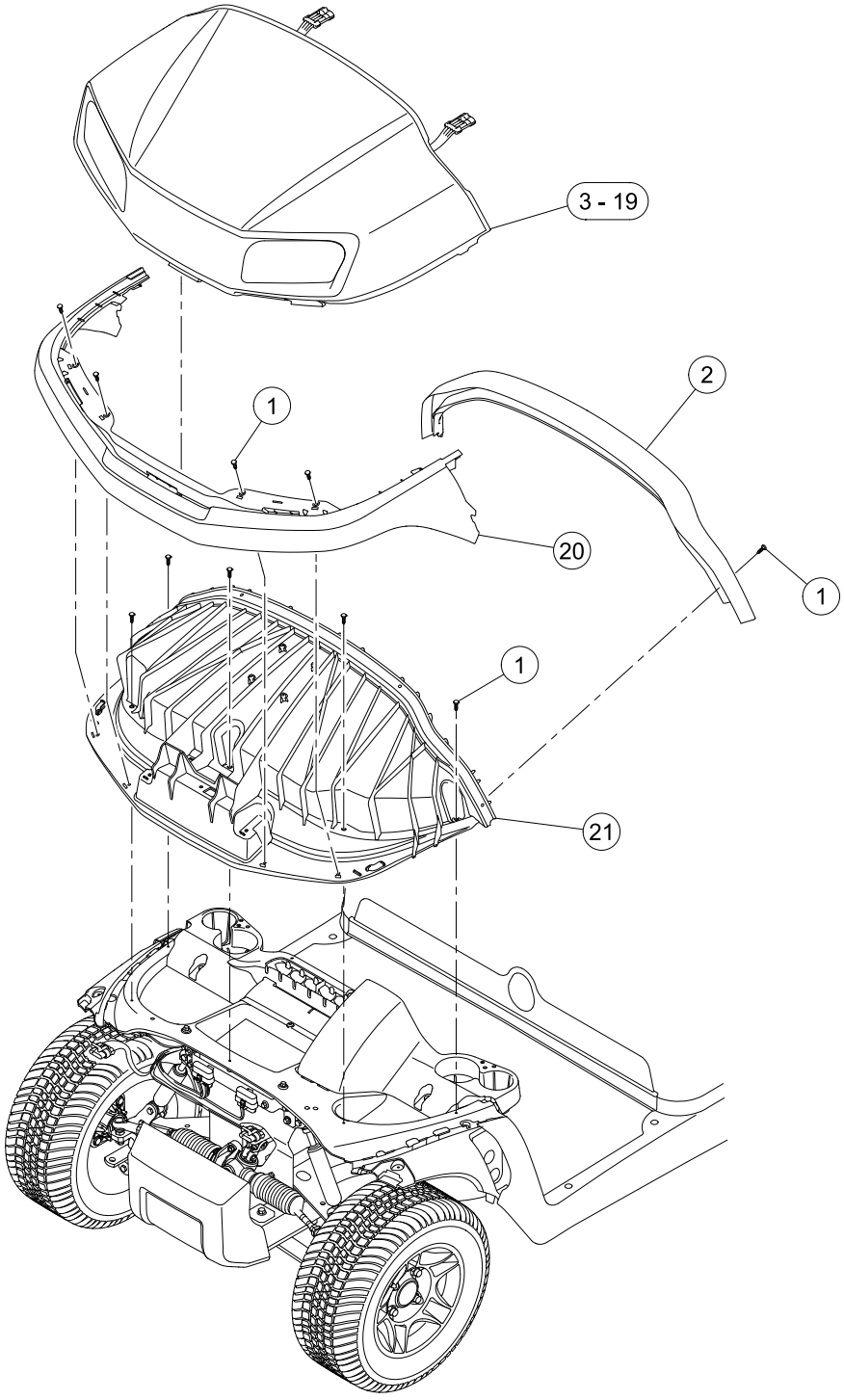

G-140199-000007

ITEM	PART NO.	DESCRIPTION	QTY
		1 2 3 4	
1	102296020	Screw, Torx Pan Hd Pt, M6 X 20	13
2	102502501	Brow Cap	1
3	47589916201	Pnl, Bty, Ft, White, Sp	1
4	47589916202	Pnl, Bty, Ft, Beige, Sp	1
5	47589916203	Pnl, Bty, Ft, Platinum, Sp	1
6	47589916204	Pnl, Bty, Ft, Sangria, Sp	1
7	47589916205	Pnl, Bty, Ft, Cayenne, Sp	1
8	47589916206	Pnl, Bty, Ft, Green, Sp	1
9	47589916207	Pnl, Bty, Ft, Sapphire, Sp	1
10	47589916208	Pnl, Bty, Ft, Black, Sp	1
11	47589916209	Pnl, Bty, Ft, Mocha, Sp	1
12	47589916210	Pnl, Bty, Ft, Cashmere, Sp	1
13	47589916301	Pnl, Bty, Ft, Mt Glacier, Sp	1
14	47589916302	Pnl, Bty, Ft, Mt Platinum, Sp	1
15	47589916303	Pnl, Bty, Ft, Mt Cndy Apl, Sp	1
16	47589916304	Pnl, Bty, Ft, Mt Green, Sp	1
17	47589916305	Pnl, Bty, Ft, Mt Sapphire, Sp	1
18	47589916306	Pnl, Bty, Ft, Mt Black, Sp	1
19	47589916307	Pnl, Bty, Ft, Mt Mocha, Sp	1
20	47589917001	Fascia, Front	1
21	47593000001	Brow, Dual Headlight	1

1

E

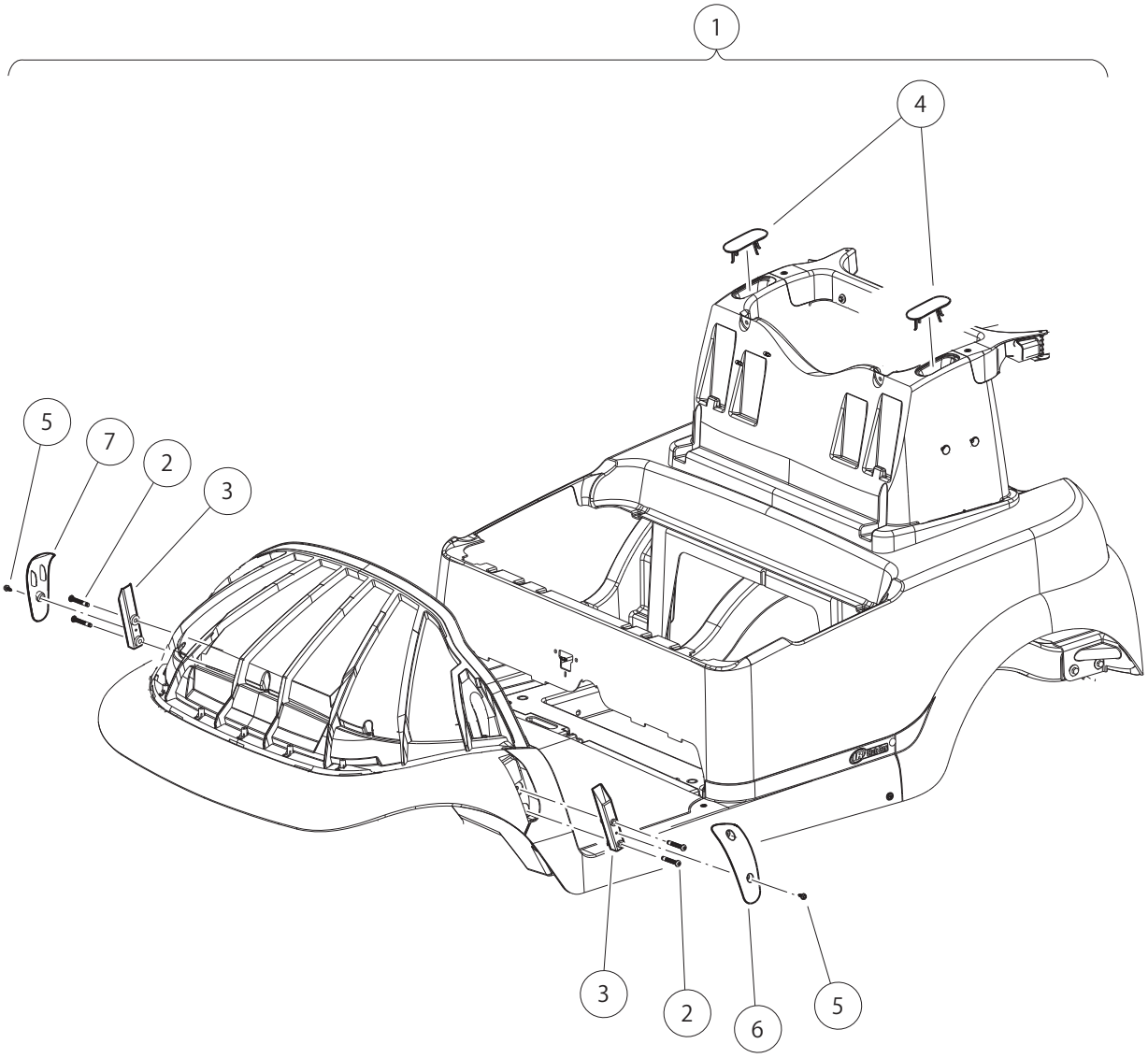

000730-005

UNDERBODY COVERS (VEHICLE WITHOUT CANOPY)

ITEM	PART NO.	DESCRIPTION	QTY
		1 2 3 4	
1	102543903	Kit, Underbody Cover (includes items 2 through 7)	1
2	102299065	M8-1.25 X 65 Tx Bttn Hd Bolt	2
3	N/A	Support, Strut Cover	2
4	N/A	SAM Cap	2
5	102544201	Screw, M6 Hex	4
6	47589922001	Cover, Strut, Lh, Non-topped	1
7	47589922002	Cover, Strut, Rh, Non-topped	1

1

E

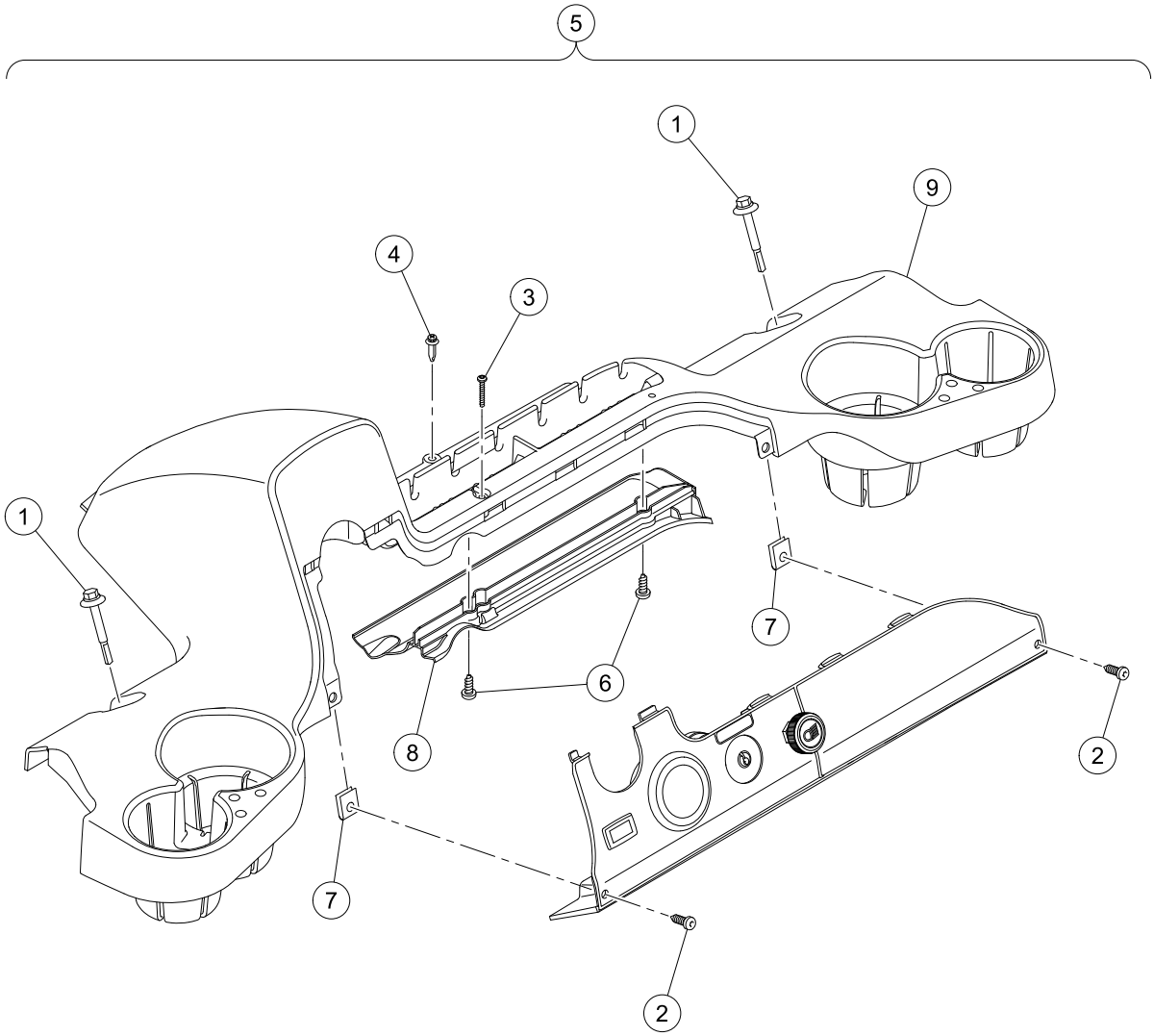

G-140499-000001

ITEM	PART NO.	DESCRIPTION	QTY
		1 2 3 4	
1	102292356	Screw-1/4-20x56 Hwh Self Drill	2
2	102296819	Screw-M6 x 19	2
3	102557201	Screw, #6-20 Type Abx1.oo Pan	1
4	102915601	Plastic Rivet - Tuflock	1
5	103402704	Dash, Ac Li (includes items 6 through 9)	1
6	N/A	Screw-torx Pan Hd Pt,m6 X 16	2
7	102297001	U-nut, 1/4" Type Ab	2
8	N/A	Drain Channel - Dash	1
9	103402701	Dash Assembly	1

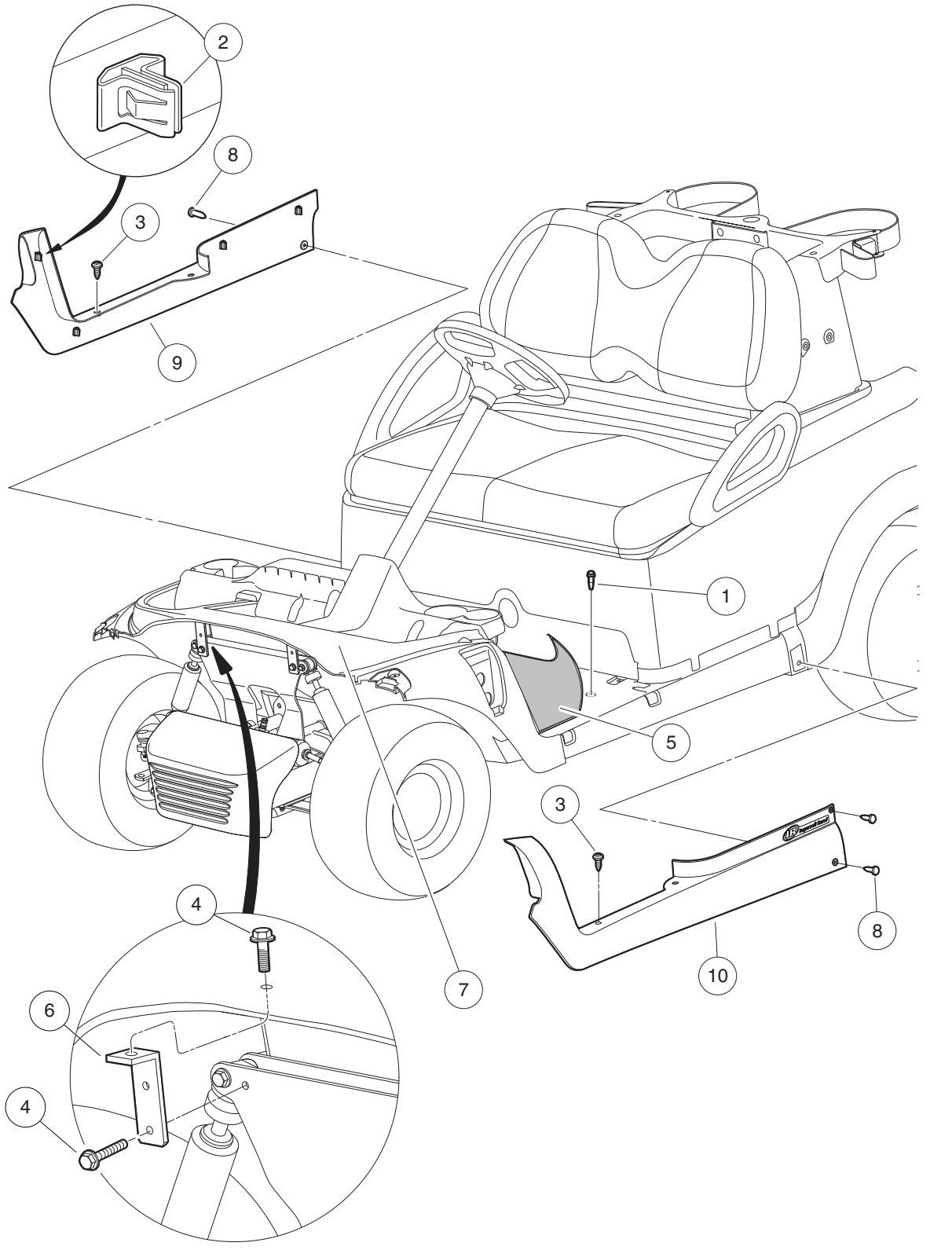

000497-007

FLOOR MAT, RETAINERS, AND FRONT UNDERBODY

ITEM	PART NO.	DESCRIPTION	QTY
		1 2 3 4	
1	102292356	Screw-1/4-20x56 Hwh Self Drill	3
2	102292701	Clip-body-trim	8
3	102298020	Screw, K80x20, Torx Pn Hd Pt	4
4	102298716	M8-1.25x16 Taptite	4
5	102504802	Floormat	1
6	102521901	Bracket-clamshell	2
7	103635201	Underbody, Front, One Piece	1
8	105291501	Rivet, Plastic Tuflok, 8mm	4
9	105314001	Floormat Retainer, Passenger-side, Black	1
10	105314101	Floormat Retainer, Driver-side, Black	1

Note: Item 7 is a special order item available upon request.

1

E

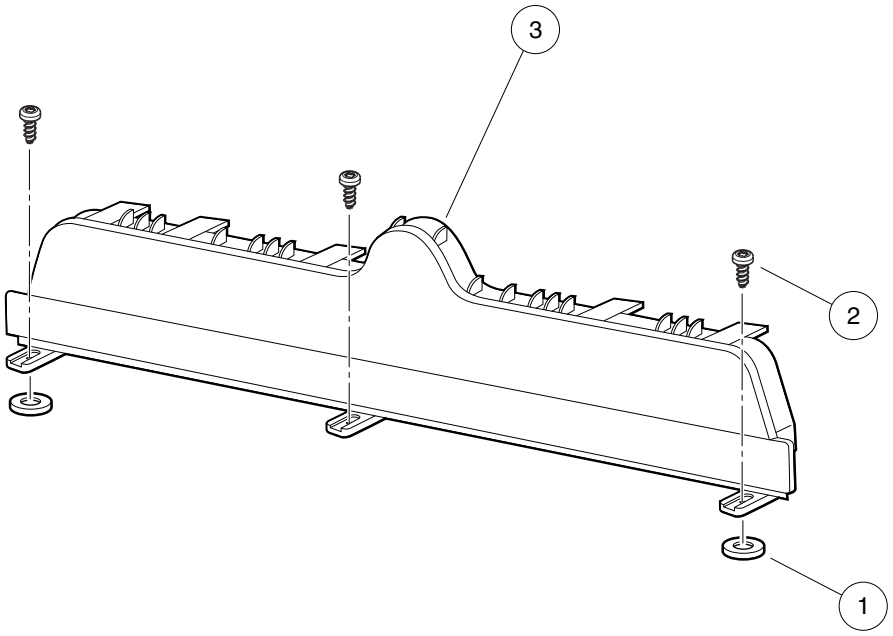

001059-001

KICK PLATE – ON-BOARD CHARGER

ITEM	PART NO.	DESCRIPTION	QTY
		1 2 3 4	
1	1012571	Washer, 5/16 Extra Thick Flat	2
2	102298020	Screw, K80x20, Torx Pn Hd Pt	3
3	105005402	Plate, Kick, Black	1

1

E

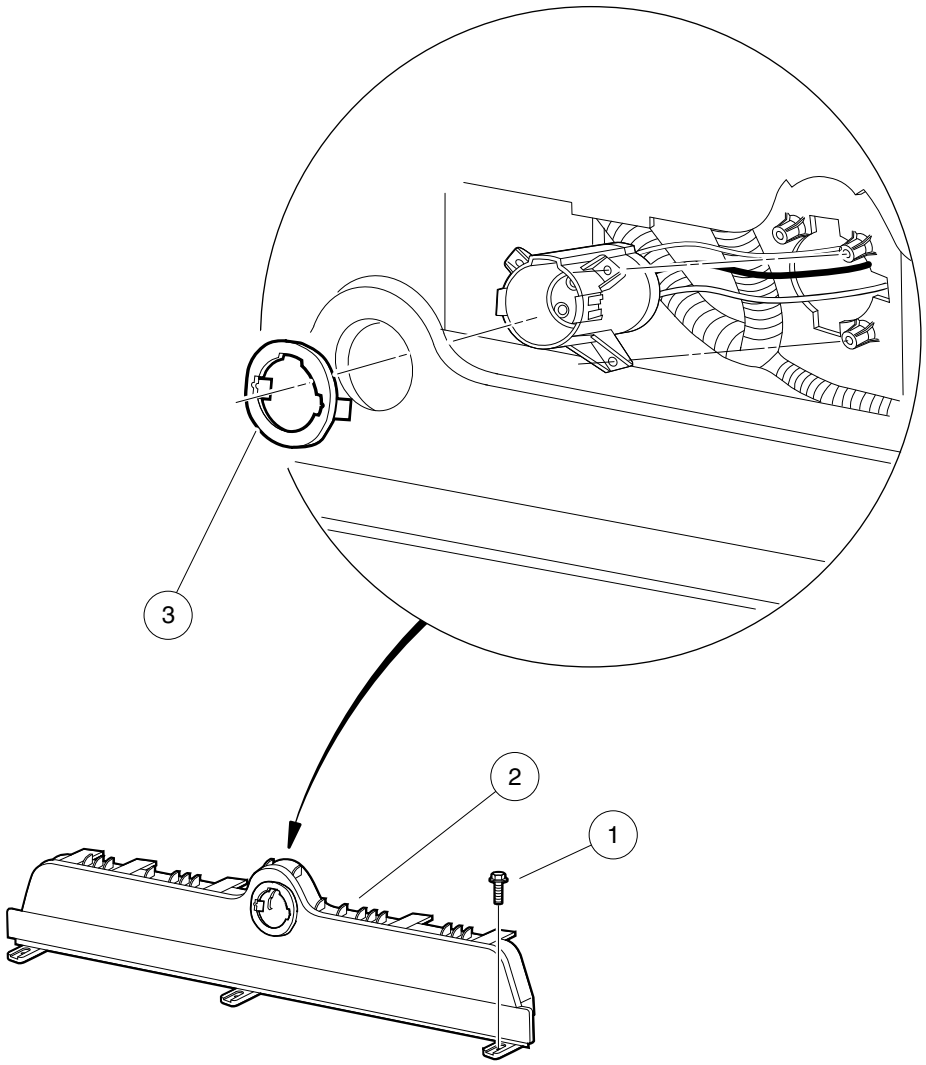

000500-003

KICK PLATE – SHELF CHARGER

ITEM	PART NO.	DESCRIPTION	QTY
		1 2 3 4	
1	102298020	Screw, K80x20, Torx Pn Hd Pt	3
2	102508202	Plate - Electric Kick Blk	1
3	102516902	Socket Trim, Charger	1

1

E

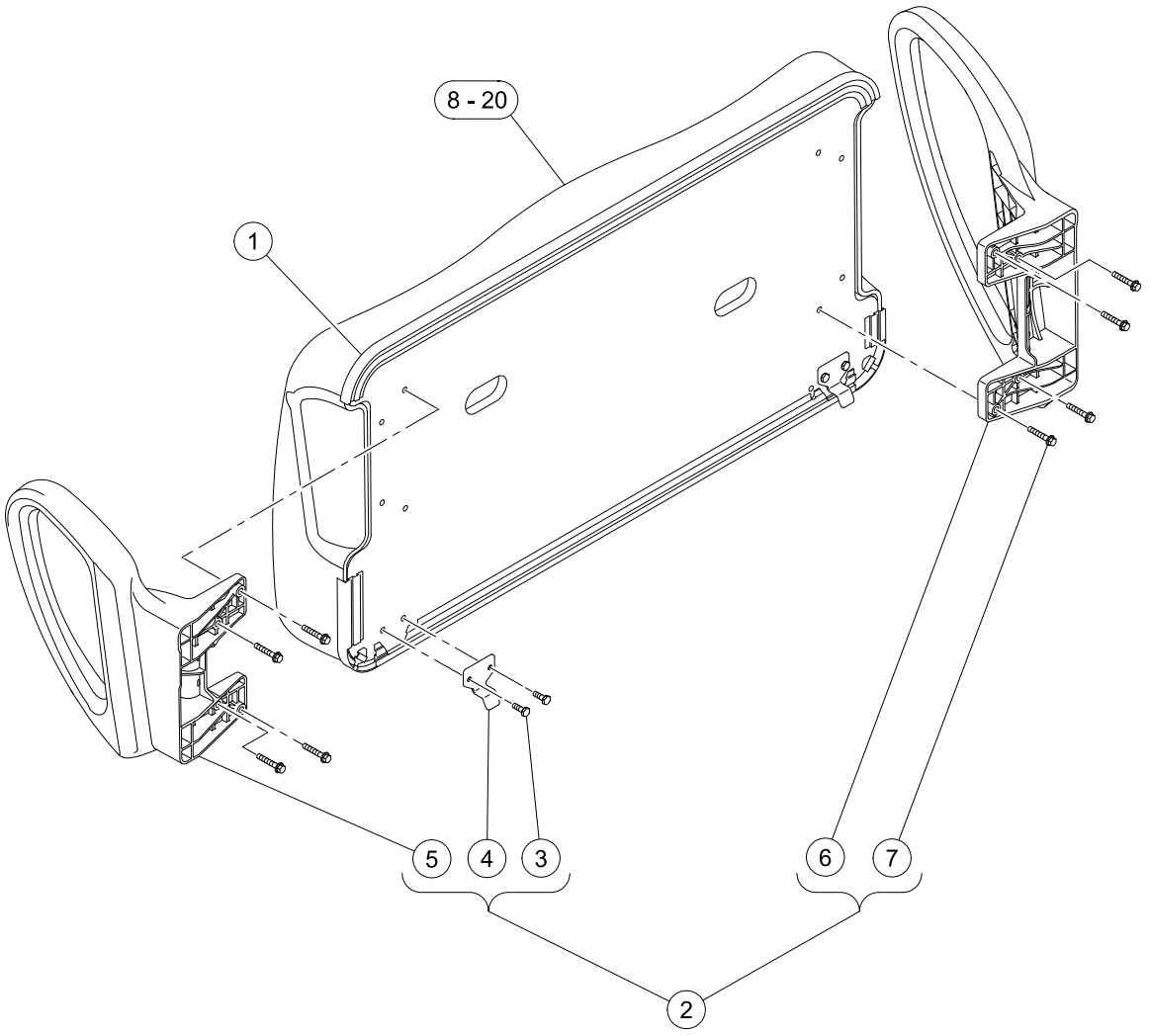

G-140699-000003

SEAT BOTTOM WITH HIP RESTRAINTS

ITEM	PART NO.	DESCRIPTION	QTY
		1 2 3 4	
1	101998501	Gasket, Seat	1
2	103833901	Kit, Seat Bottom (includes items 3 through 7)	1
3	101954301	Screw, 1/4-20 X 0.75 Hex-Head Cap	4
4	103832901	Hinge, Seat Bottom	2
5	103833601	Hip Restraint, Drv	1
6	103833701	Hip Restraint, Pas	1
7	103833801	1/4-20 X 1.5 Hex Flg Patch	8
8	104023421	Seat Bottom Asm, Beige, Service Replacement	1
9	104023422	Seat Bottom Asm, White, Service Replacement	1
10	104023424	Seat Bottom Asm, Gray, Service Replacement	1
11	104023425	Seat Bottom Asm, Black, Service Replacement	1
12	105223321	Seat Bottom Asm, Premium, Light Beige, Service Replacement	1
13	105223322	Seat Bottom Asm, Premium, Camello, Service Replacement	1
14	105223323	Seat Bottom Asm, Premium, Off-White, Service Replacement	1
15	105223324	Seat Bottom Asm, Premium, Camello/Lt. Beige, Service Replacement	1
16	105223325	Seat Bottom Asm, Premium, Camello/Off-White, Service Replacement	1
17	105223326	Seat Bottom Asm, Premium, Lt. Beige/Off-White, Service Replacement	1
18	105223327	Seat Bottom Asm, Premium, Black, Service Replacement	1
19	105223328	Seat Bottom Asm, Premium, Black/Gray, Service Replacement	1
20	105223329	Seat Bottom Asm, Premium, Gray, Service Replacement	1

Note: Item 1 is supplied with all seat bottom assemblies and can be procured individually.

1

E

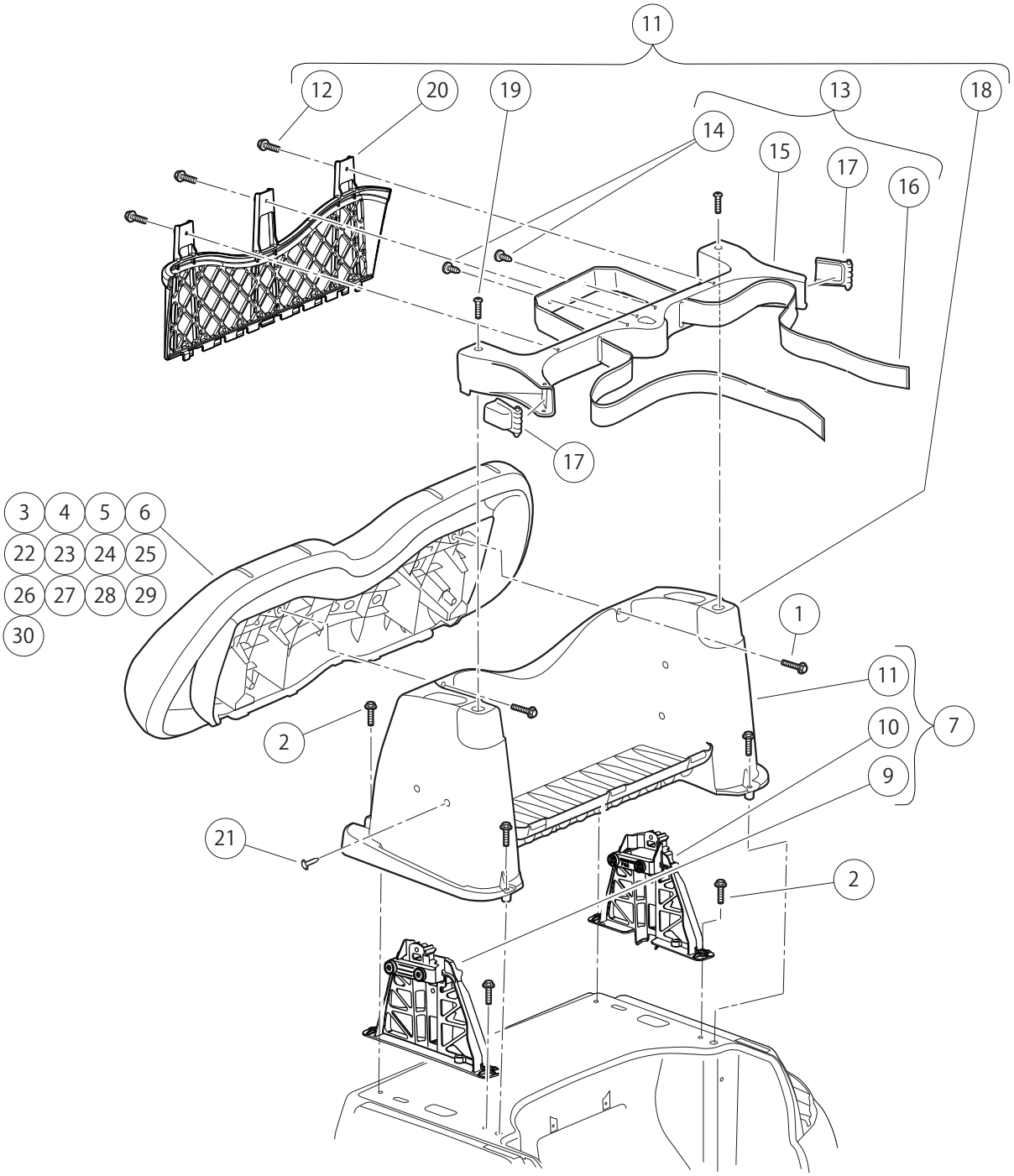

000435-013

SEAT BACK, BACKREST, AND STRUCTURAL ACCESSORY MODULE (SAM)

ITEM	PART NO.	DESCRIPTION	QTY
		1 2 3 4	
1	102296530	Screw - M6 X 1.0 X 30 Sems	2
2	102298240	Bolt, Flange Head, M8-1.25 X 40	6
3	103853121	Asm, Seat Back, Beige, Service Replacement	1
4	103853122	Asm, Seat Back, White, Service Replacement	1
5	103853124	Asm, Seat Back, Gray, Service Replacement	1
6	103853125	Asm, Seat Back, Black, Service Replacement	1
7	103952901	Kit, S.A.M. Assembly (includes items 8 through 11)	1
8	102297230	Screw, M6, Torx, Interlock Thread	4
9	103929301	Support- Canopy, Drv	1
10	103929302	Support- Canopy, Pass	1
11	N/A	Asm, S.A.M. (includes items 12 through 20)	1
12	102297230	Screw, M6, Torx, Interlock Thread	3
13	102504001	Asm, Bag Hoop (includes items 14 through 17)	1
14	1010434	Barrel - Plastic	2
15	102504201	Hoop-bag	1
16	102504301	Strap, Bag	1
17	102517001	Buckle-bag Strap	2
18	N/A	Structural Accessory Module (S.A.M.)	1
19	103327601	Screw, 5/16, Torx, Bosscrew	2
20	103699401	Panel, S.A.M., Prec	1
21	103978801	Barrel-push 6mm	4
22	105223421	Asm, Seat Back, Premium, Lt. Beige, Service Replacement	1
23	105223422	Asm, Seat Back, Premium, Camello, Service Replacement	1
24	105223423	Asm, Seat Back, Premium, Off-White, Service Replacement	1
25	105223424	Asm, Seat Back, Premium, Camello/Lt. Beige, Service Replacement	1
26	105223425	Asm, Seat Back, Premium, Camello/Off-White, Service Replacement	1
27	105223426	Asm, Seat Back, Premium, Lt. Beige/Off-White, Service Replacement	1
28	105223427	Asm, Seat Back, Premium, Black, Service Replacement	1
29	105223428	Asm, Seat Back, Premium, Black/Gray, Service Replacement	1
30	105223429	Sp,asm,prem Seat Back,gray	1

Note: Screws (item 8) not shown. These are four new screws to replace those used to attach accessory mounting brackets to SAM (item 18).

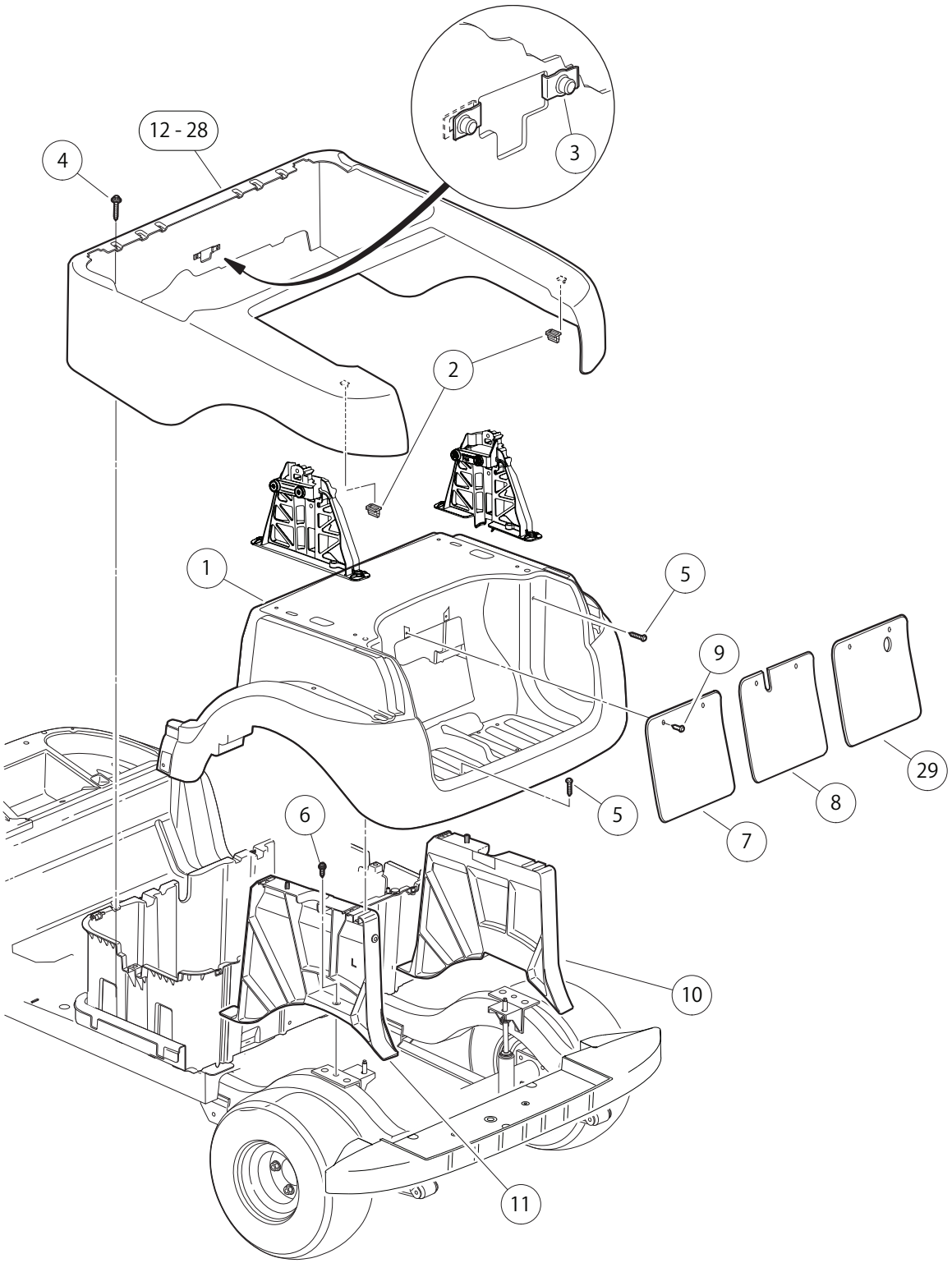

000436-019

ITEM	PART NO.	DESCRIPTION	QTY
		1 2 3 4	
1	102279104	Underbody - Rear, Blk	1
2	102292701	Clip-body-trim	2
3	102296601	U-Nut, M6-1.0, Prevailing Torque	2
4	102297230	Screw, M6, Torx, Interlock Thread	4
5	102298030	Screw, K80x30, Torx Pn Hd Pt	4
6	102298720	Screw, M8-1.25x20, Taptite	2
7	102501402	Panel, Access, Black	1
8	102501403	Panel, Access, Black, with Punched Hole	1
9	102967901	Rivet, Removable, Tuflok 1/4"	2
10	103812901	Asm, Rear Underbody Support, Passenger-side	1
11	103813001	Asm, Rear Underbody Support, Driver-side	1
12	47589919201	Pnl, Bty, Rr, White, Sp	1
13	47589919202	Pnl, Bty, Rr, Beige, Sp	1
14	47589919203	Pnl, Bty, Rr, Platinum, Sp	1
15	47589919204	Pnl, Bty, Rr, Sangria, Sp	1
16	47589919205	Pnl, Bty, Rr, Cayenne, Sp	1
17	47589919206	Pnl, Bty, Rr, Green, Sp	1
18	47589919207	Pnl, Bty, Rr, Sapphire, Sp	1
19	47589919208	Pnl, Bty, Rr, Black, Sp	1
20	47589919209	Pnl, Bty, Rr, Mocha, Sp	1
21	47589919210	Pnl, Bty, Rr, Cashmere, Sp	1
22	47589919301	Pnl, Bty, Rr, Mt Glacier, Sp	1
23	47589919302	Pnl, Bty, Rr, Mt Platinum, Sp	1
24	47589919303	Pnl, Bty, Rr, Mt Cndy Apl, Sp	1
25	47589919304	Pnl, Bty, Rr, Mt Green, Sp	1
26	47589919305	Pnl, Bty, Rr, Mt Sapphire, Sp	1
27	47589919306	Pnl, Bty, Rr, Mt Black, Sp	1
28	47589919307	Pnl, Bty, Rr, Mt Mocha, Sp	1
29	SVP915201	Panel-access-lite Hole Cut Out	1

Note: Item 7 is for use on vehicles without an onboard charger. Item 8 and 29 are for use on vehicles with optional onboard chargers.

1

E

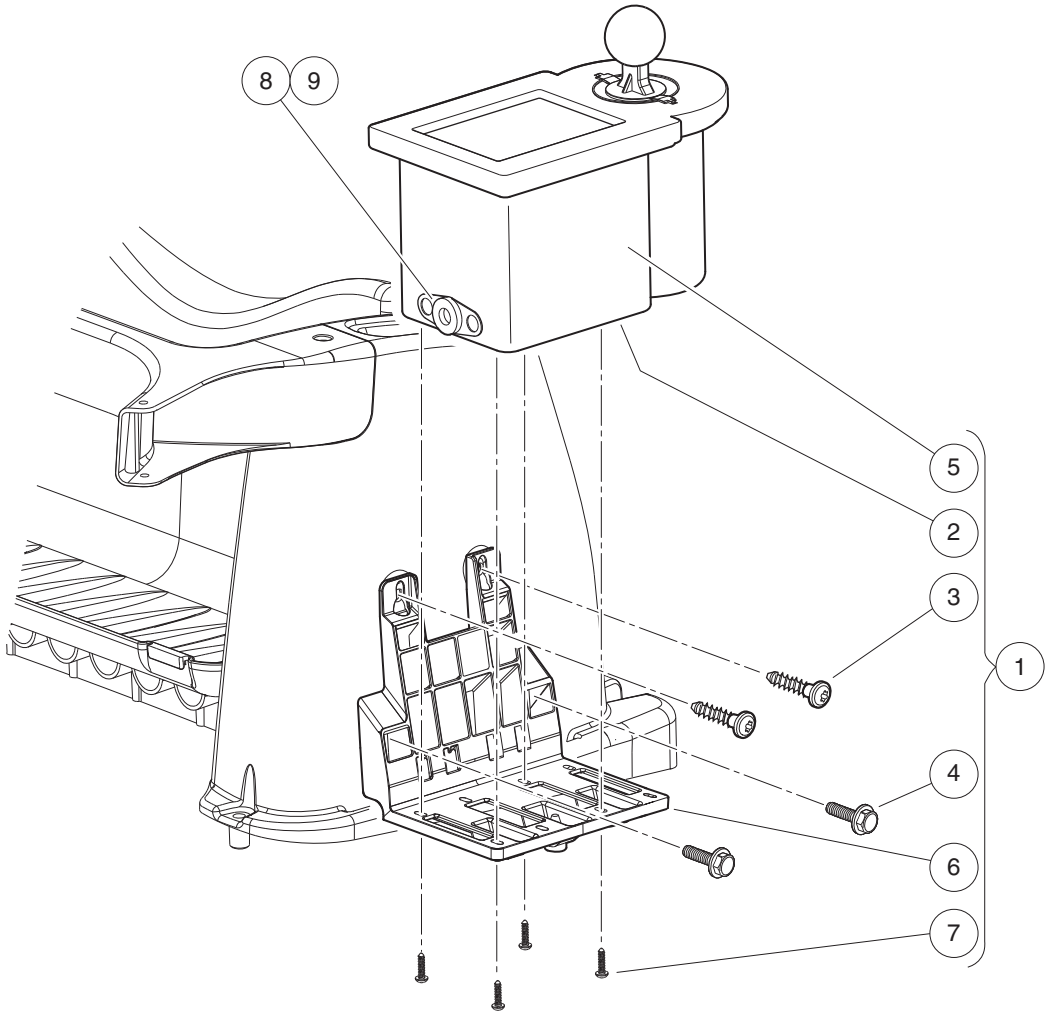

001046-002

CLUB AND BALL CLEANER KIT

ITEM	PART NO.	DESCRIPTION	QTY
		1 2 3 4	
1	102538803	Ball Washer (includes items 2 through 7)	1
2	1010436	Bumper, Rubber	1
3	102297230	Screw, M6, Torx, Interlock Thread	2
4	102541401	Bolt-m6x1.0x20 Hex Flhd Blk-l	2
5	103662801	Washer, Ball, Black	1
6	103994101	Bracket, Ball Washer	1
7	1620	Screw, #10-16 X 0.75 Pan-Head Tap	4
8	AM1231201	Drain Plug, Club Clean	1
9	AM1292101	Drain Plug, Ball Washer, Tabbed	1

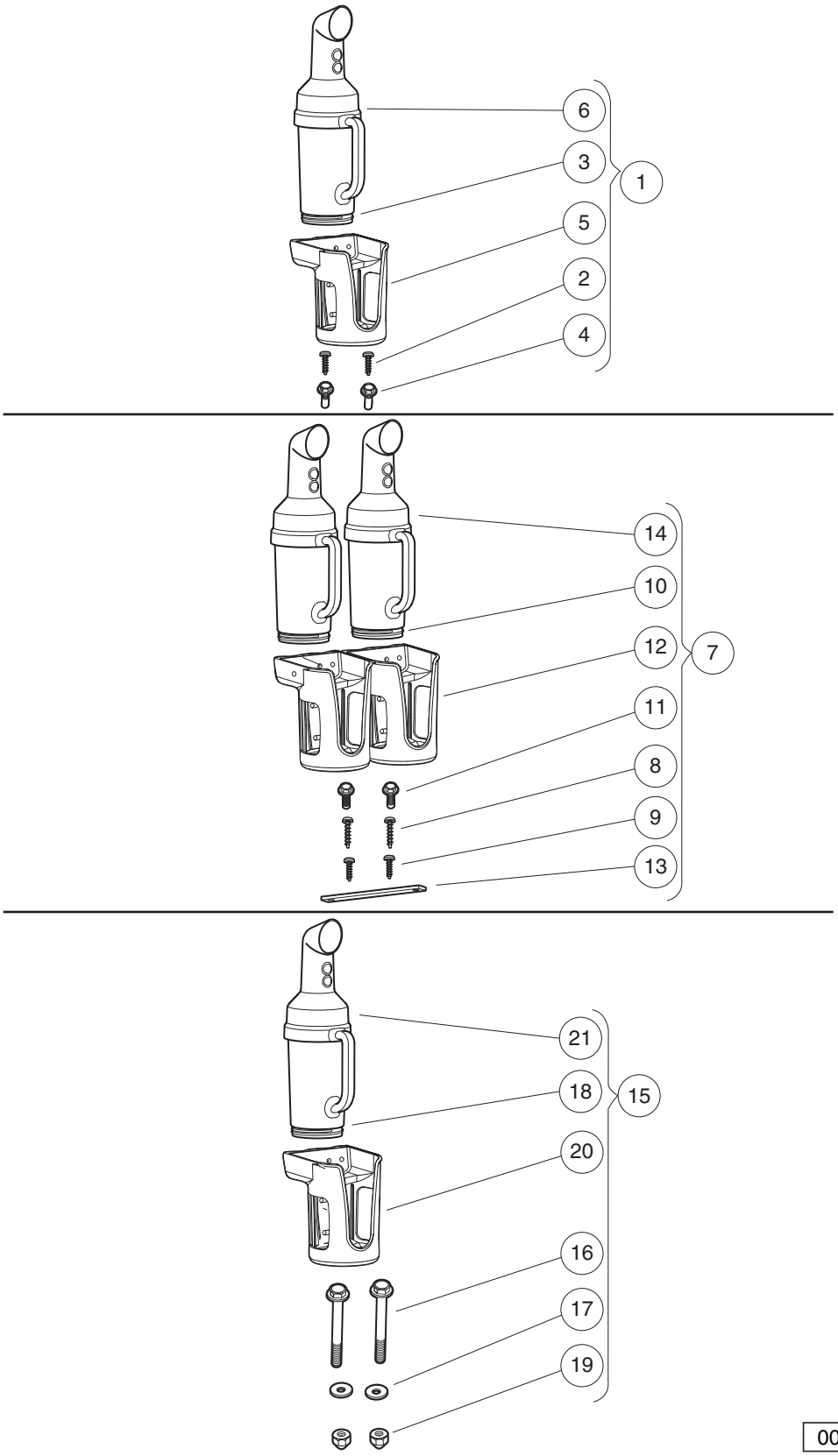

001048-002

SAND BOTTLE KITS WITH HANDLES

ITEM	PART NO.	DESCRIPTION	QTY
		1 2 3 4	
1	105291701	Kit, Hndl Sand Bttl, Sam, Sngl (includes items 2 through 6)	1
2	102297230	Screw, M6, Torx, Interlock Thread	2
3	102478101	Cap, Sand Bottle, Bottom-Fill	1
4	102541425	Bolt, M6x1.0x25, Hex Flhd, Blk-I	2
5	103451301	Basket, Sand Bottle	1
6	105284001	Sand Bottle Asm - Handled	1
7	105291702	Kit, Hndl Sand Bttl, Sam, Dual (includes items 8 through 14)	1
8	102296020	Screw-torx Pan Head Pt, M6x20	2
9	102297230	Screw, M6, Torx, Interlock Thread	2
10	102478101	Cap, Sand Bottle, Bottom-Fill	2
11	102541425	Bolt, M6x1.0x25, Hex Flhd, Blk-I	2
12	103451301	Basket, Sand Bottle	2
13	103451401	Link, Dual Basket	1
14	105284001	Sand Bottle Asm - Handled	2
15	105291703	Kit, Hndl Sand Bttl, Strt (includes items 16 through 21)	1
16	102296150	Bolt - M6x1.0x50 Hex Flng Hd	2
17	102296301	Washer, M6x18x1.6 Flat	2
18	102478101	Cap, Sand Bottle, Bottom-Fill	1
19	102582401	Cap Nut M6, Sp	2
20	103451301	Basket, Sand Bottle	1
21	105284001	Sand Bottle Asm - Handled	1

Note: Sand bottle assembly is supplied with sand bottle cap.

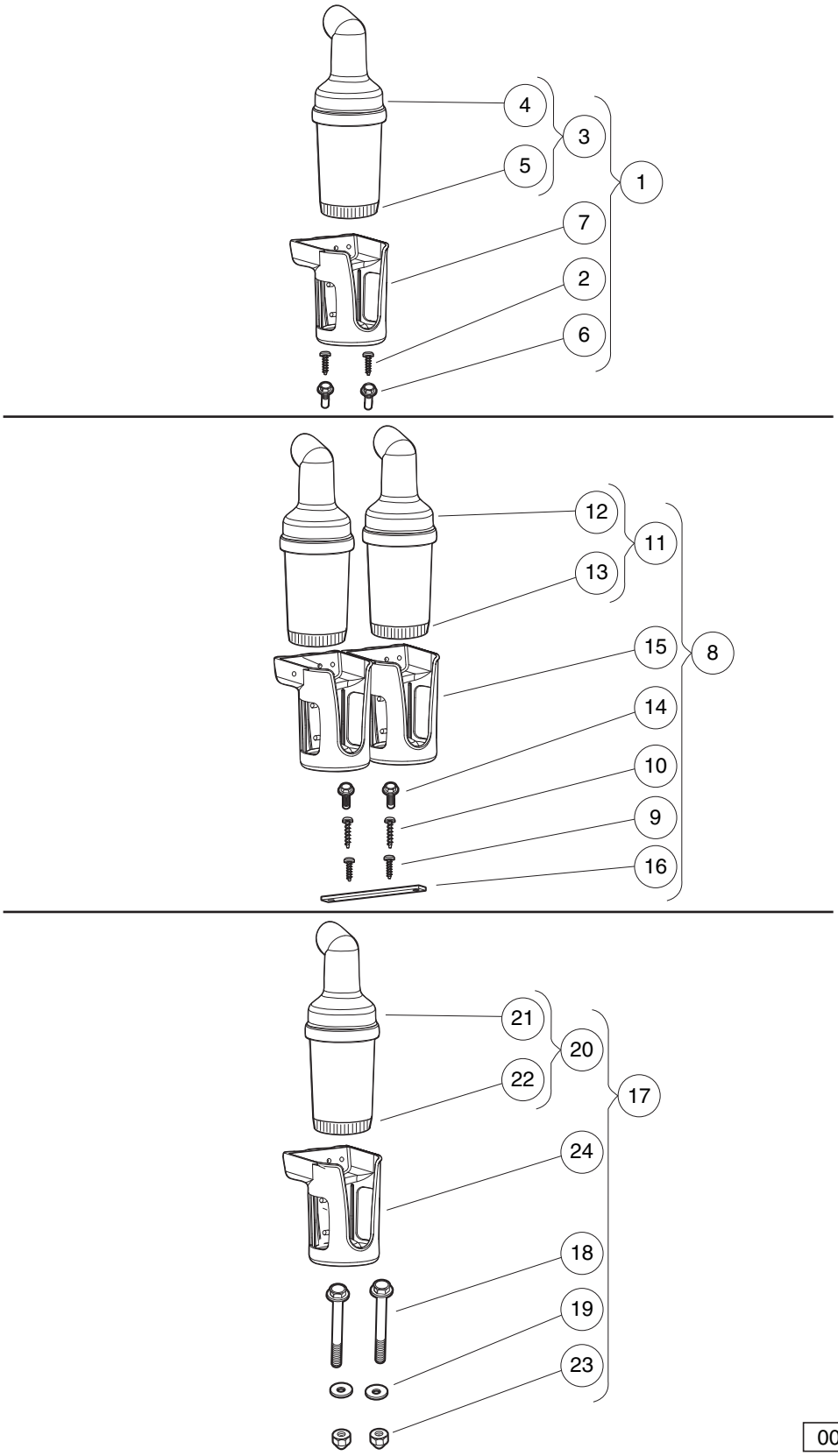

001048-001

SAND BOTTLE KITS

ITEM	PART NO.	DESCRIPTION	QTY
		1 2 3 4	
1	103451901	Kit, Sand Bottle, Sam, Single (includes items 2 through 7)	1
2	102297230	Screw, M6, Torx, Interlock Thread	2
3	102478201	Asm, Sand Bottle, Bottom-Fill, Curve/Grip Neck (includes items 4 and 5)	1
4	N/A	Sand Bottle, Bottom-Fill, Curve/Grip Neck	1
5	102478101	Cap, Sand Bottle, Bottom-Fill	1
6	102541425	Bolt, M6x1.0x25, Hex Flhd, Blk-I	2
7	103451301	Basket, Sand Bottle	1
8	103451902	Kit, Sand Bottle, Sam, Dual (includes items 9 through 16)	1
9	102296020	Screw, Torx Pan Hd Pt, M6 X 20	2
10	102297230	Screw, M6, Torx, Interlock Thread	2
11	102478201	Asm, Sand Bottle, Bottom-Fill, Curve/Grip Neck (includes items 12 and 13)	2
12	N/A	Sand Bottle, Bottom-Fill, Curve/Grip Neck	1
13	102478101	Cap, Sand Bottle, Bottom-Fill	1
14	102541425	Bolt, M6x1.0x25, Hex Flhd, Blk-I	2
15	103451301	Basket, Sand Bottle	2
16	103451401	Link, Dual Basket	1
17	103451903	Kit, Sand Bottle, Strut (includes items 18 through 24)	1
18	102296150	Bolt - M6x1.0x50 Hex Flng Hd	2
19	102296301	Washer, M6x18x1.6 Flat	2
20	102478201	Asm, Sand Bottle, Bottom-Fill, Curve/Grip Neck (includes items 21 and 22)	1
21	N/A	Sand Bottle, Bottom-Fill, Curve/Grip Neck	1
22	102478101	Cap, Sand Bottle, Bottom-Fill	1
23	102582401	Cap Nut M6, Sp	2
24	103451301	Basket, Sand Bottle	1

1

E

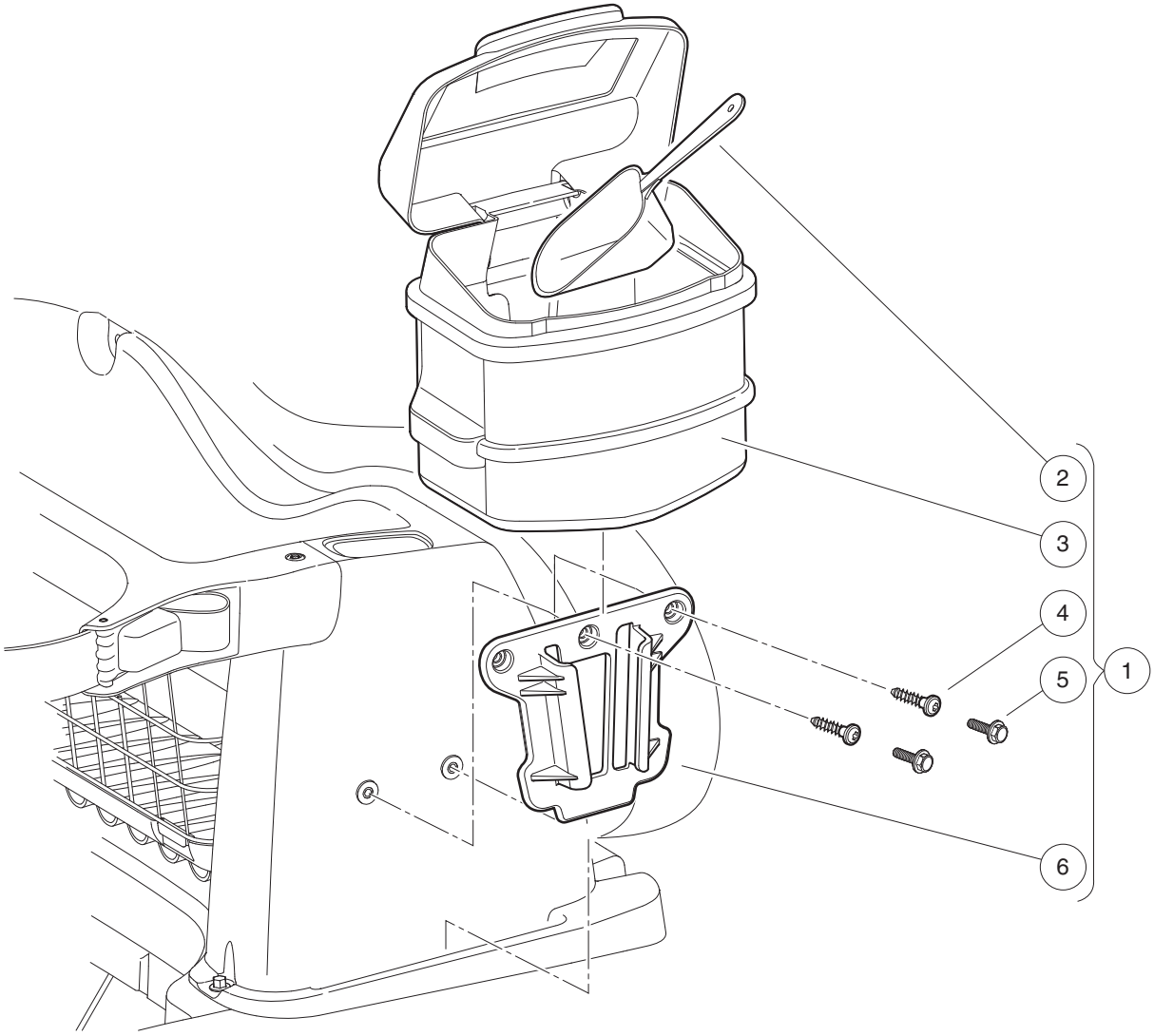

001047-001

SAND BUCKET KITS

ITEM	PART NO.	DESCRIPTION	QTY
		1 2 3 4	
1	102536103	Sand Bucket Instl, Field (includes items 2 through 6)	1
2	1017041	Scoop, Plastic Sand	1
3	101985201	Bucket Assy, Sand	1
4	102297230	Screw, M6, Torx, Interlock Thread	2
5	102541401	Bolt-m6x1.0x20 Hex Flhd Blk-l	2
6	103886801	Accessory Bracket	1

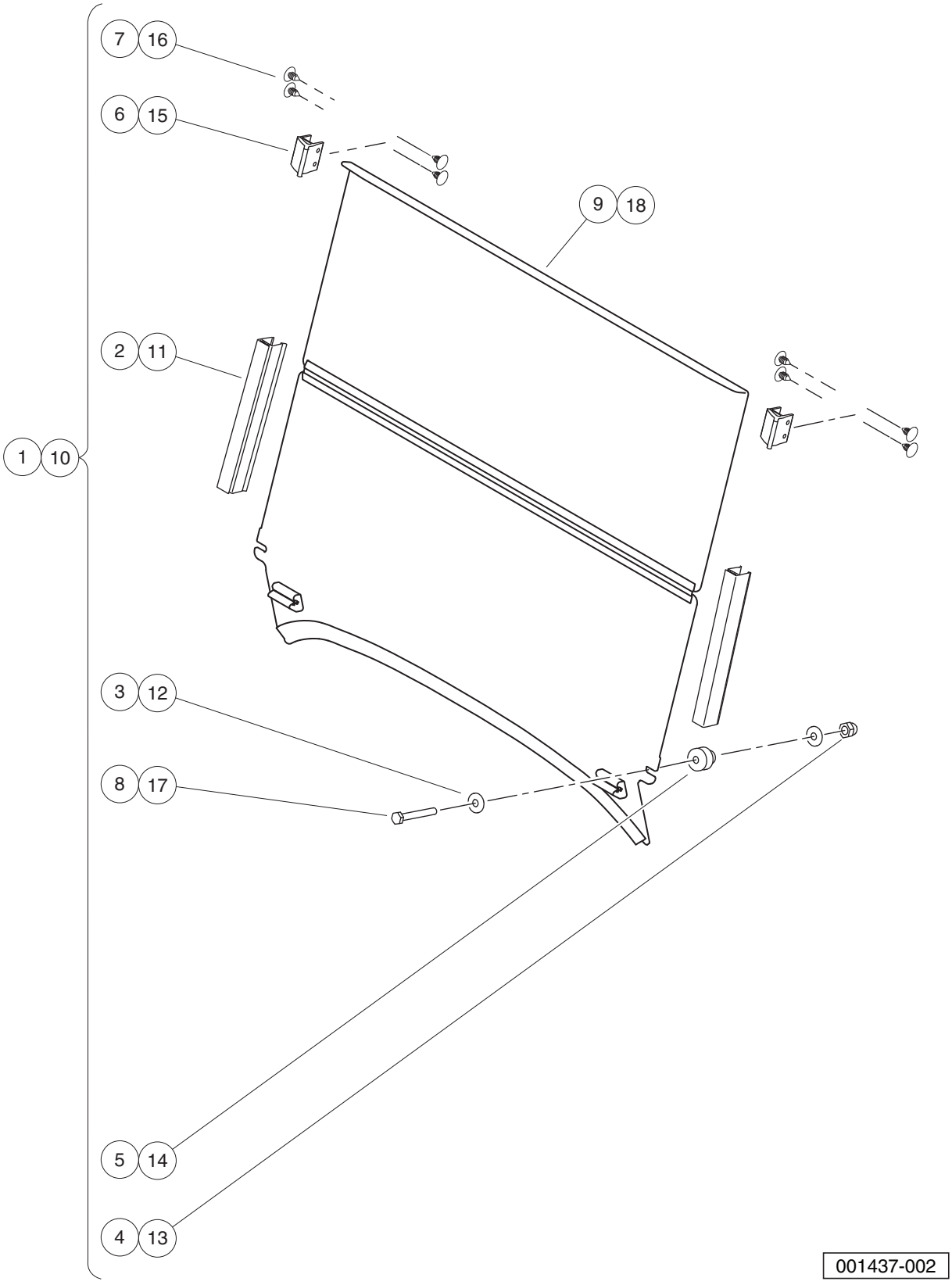
7
16
6
15
9
18
2
11
1
10
3
12
8
17
5
14
4
13
001437-002

WINDSHIELD – HINGED

ITEM	PART NO.	DESCRIPTION	QTY
		1 2 3 4	
1	47542668001	Kit, Wndshield, NIM, A, Clear (includes items 2 through 9)	1
2	102163001	Windshield Channel	2
3	102296301	Washer, M6x18x1.6 Flat	4
4	102582401	Cap Nut M6, Sp	2
5	102947601	Grommet, Windshield	2
6	103677101	W/s, Rubber, Clip Retainer	2
7	103754901	Fastener, Barrel - .610 X .25	8
8	105289701	M6x1.0x48 Hex Hd Bolt-blk	2
9	47542667001	Windshield, Nim, Style A, Clear	1
10	47542668002	Kit, Wndshield, NIM, A, Tinted (includes items 11 through 18)	1
11	102163001	Windshield Channel	2
12	102296301	Washer, M6x18x1.6 Flat	4
13	102582401	Cap Nut M6, Sp	2
14	102947601	Grommet, Windshield	2
15	103677101	W/s, Rubber, Clip Retainer	2
16	103754901	Fastener, Barrel - .610 X .25	8
17	105289701	M6x1.0x48 Hex Hd Bolt-blk	2
18	47542667002	Windshld, Nim, Style A, T2404	1

1

E

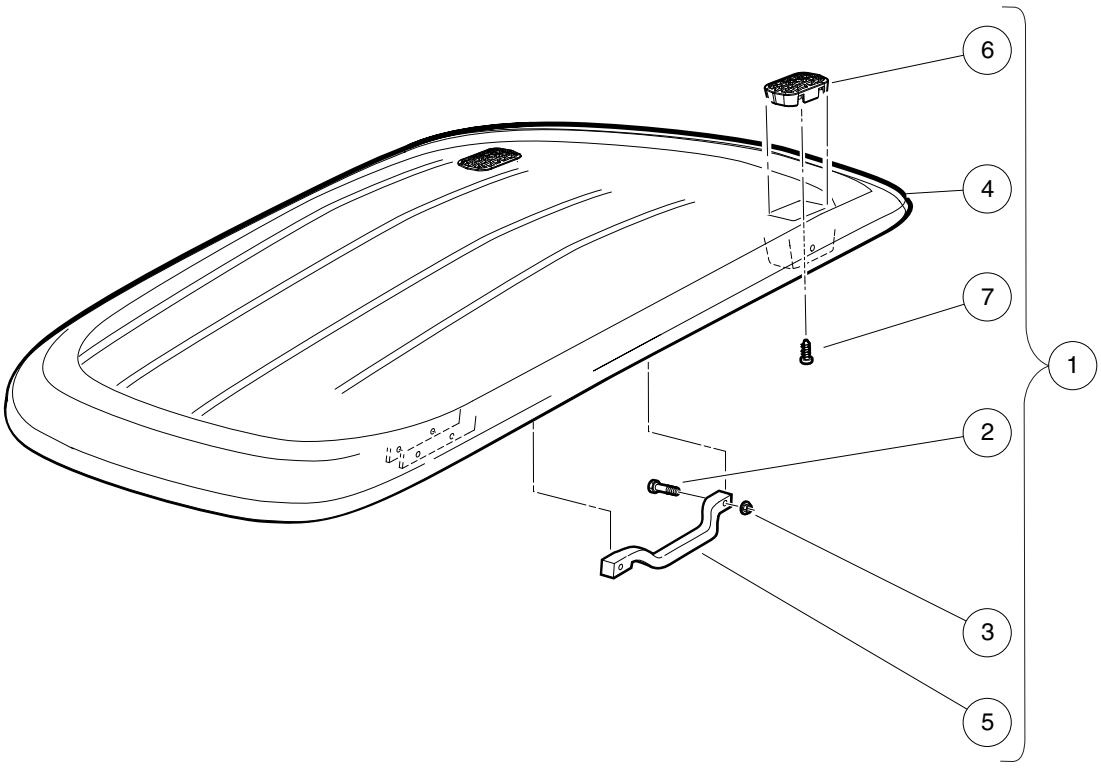

000439-009

CANOPY – WHITE

ITEM	PART NO.	DESCRIPTION	QTY
		1 2 3 4	
1	104008001	Asm, Canopy W/handles, White (includes items 2 through 7)	1
2	102296140	Bolt, Flanged Head, M6x1.0x40	4
3	102296401	Nut, M6x1.0, Flange, Metal Lock	4
4	102508901	Canopy-white	1
5	102511601	Handle, Canopy (White)	2
6	103205101	Cover, Drain, Canopy	2
7	103210101	Screw, #8 X.75, Torx, Tapping	2

1

E

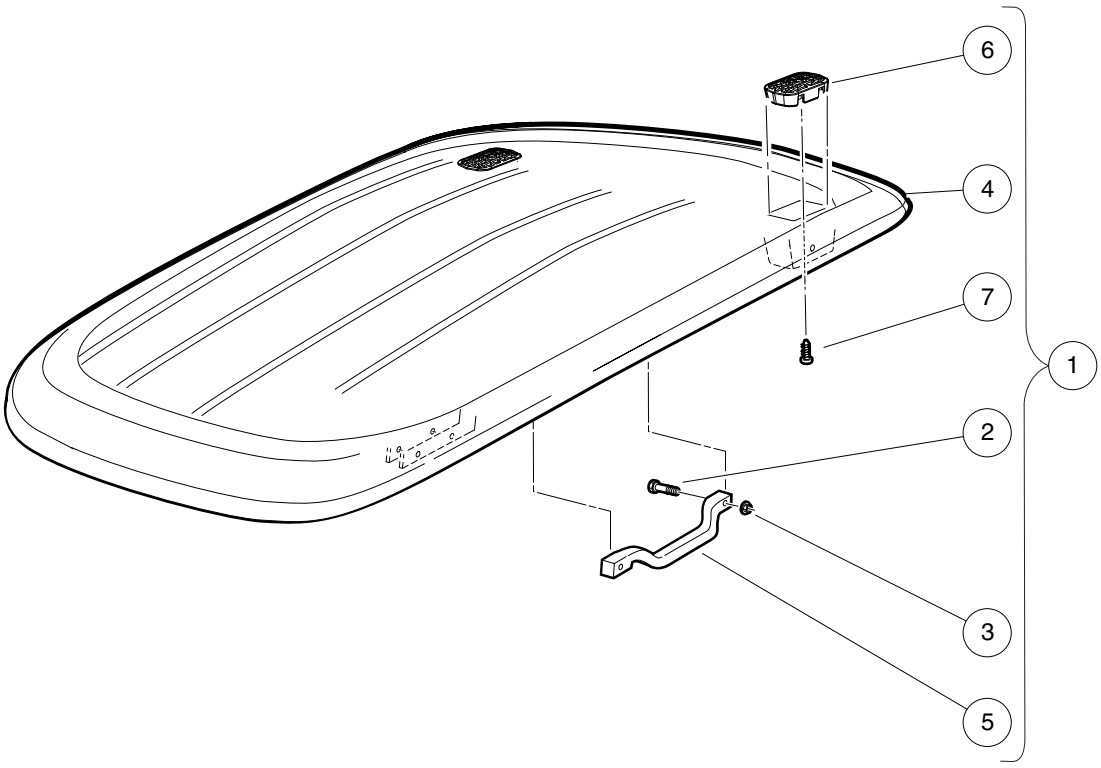

000439-009

CANOPY – BEIGE

ITEM	PART NO.	DESCRIPTION	QTY
		1 2 3 4	
1	104008002	Asm, Canopy W/handles, Beige (includes items 2 through 7)	1
2	102296140	Bolt, Flanged Head, M6x1.0x40	4
3	102296401	Nut, M6x1.0, Flange, Metal Lock	4
4	102508902	Canopy-beige	1
5	102511602	Handle, Canopy (Beige)	2
6	103205101	Cover, Drain, Canopy	2
7	103210101	Screw, #8 X.75, Torx, Tapping	2

1

E

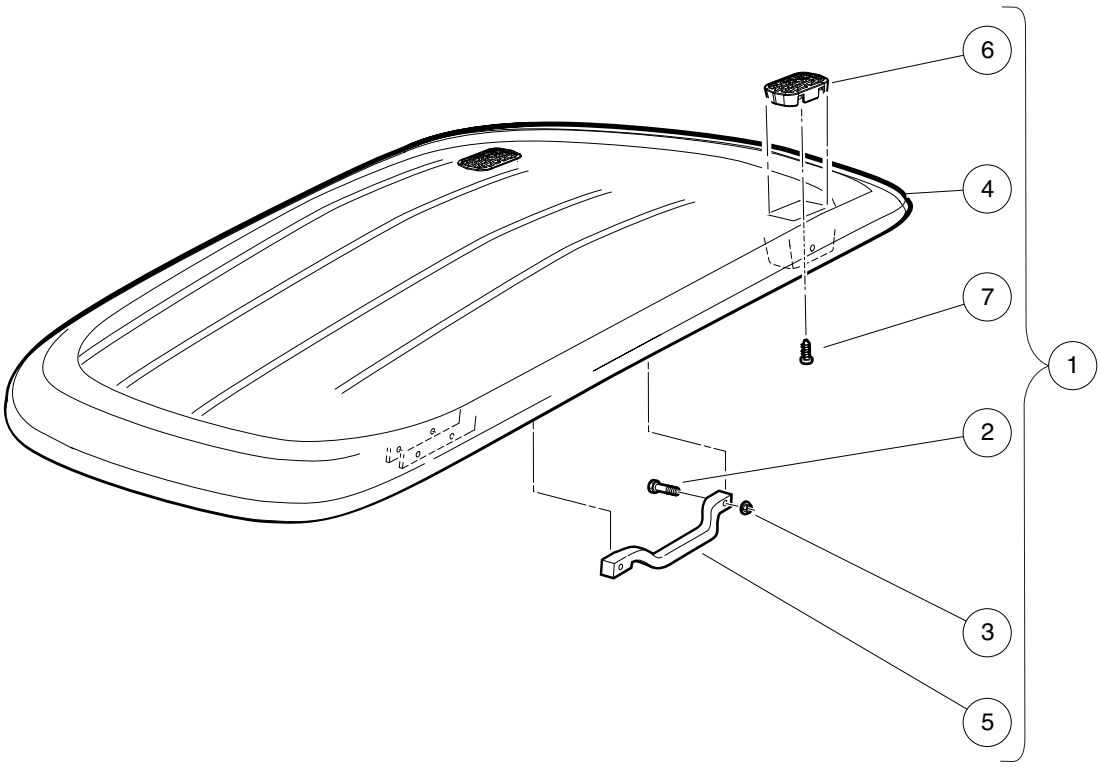

000439-009

CANOPY – BLACK

ITEM	PART NO.	DESCRIPTION	QTY
		1 2 3 4	
1	104008003	Asm, Canopy W/handles, Black (includes items 2 through 7)	1
2	102296140	Bolt, Flanged Head, M6x1.0x40	4
3	102296401	Nut, M6x1.0, Flange, Metal Lock	4
4	102508903	Canopy-black	1
5	102511603	Handle-canopy (black)	2
6	103205101	Cover, Drain, Canopy	2
7	103210101	Screw, #8 X.75, Torx, Tapping	2

1

E

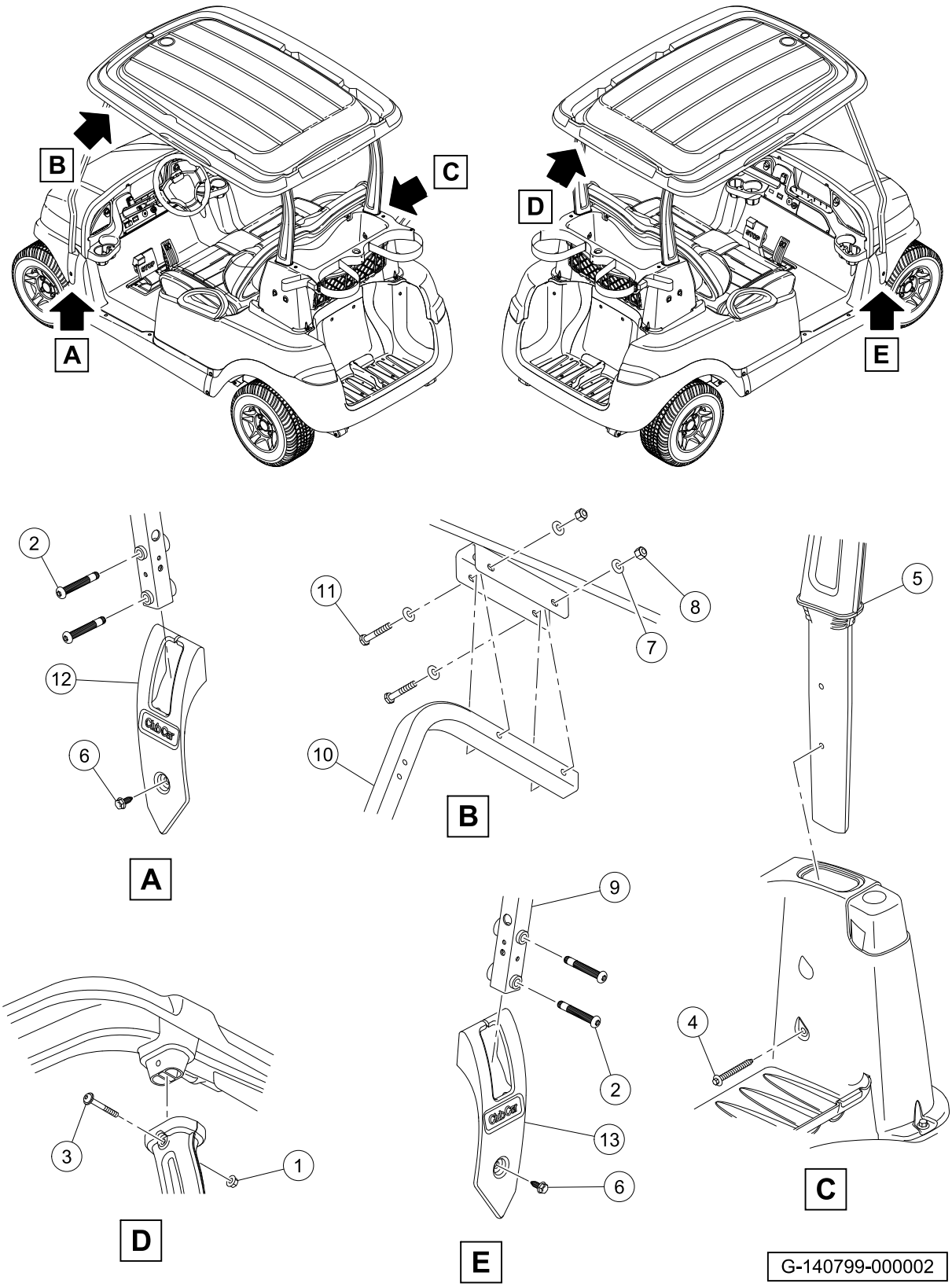

CANOPY STRUTS – TOPPED

ITEM	PART NO.	DESCRIPTION	QTY
		1 2 3 4	
1	102298401	Nut, M8, All Metal Lock	2
2	102299065	M8-1.25 X 65 Tx Bttn Hd Bolt	4
3	102299360	Screw, M8-1.25 X 60, Sems, Tx	2
4	102299601	Screw, Pt, K80x70 Hex Flg Hd	2
5	102513501	Asm-rear Canopy Support	1
6	102544201	Screw, M6 Hex	2
7	103196001	Washer, Conical Spring, Canopy	8
8	103200301	Nut, M6 x 1.00	4
9	103750001	Strut, Canopy Front, Passenger-side	1
10	103750101	Strut, Canopy Front, Driver-side	1
11	103774801	Screw, Pt, Washer Head, 4x16	6
12	47589920001	Cover, Strut, LH, Topped	1
13	47589920002	Cover, Strut, RH, Topped	1

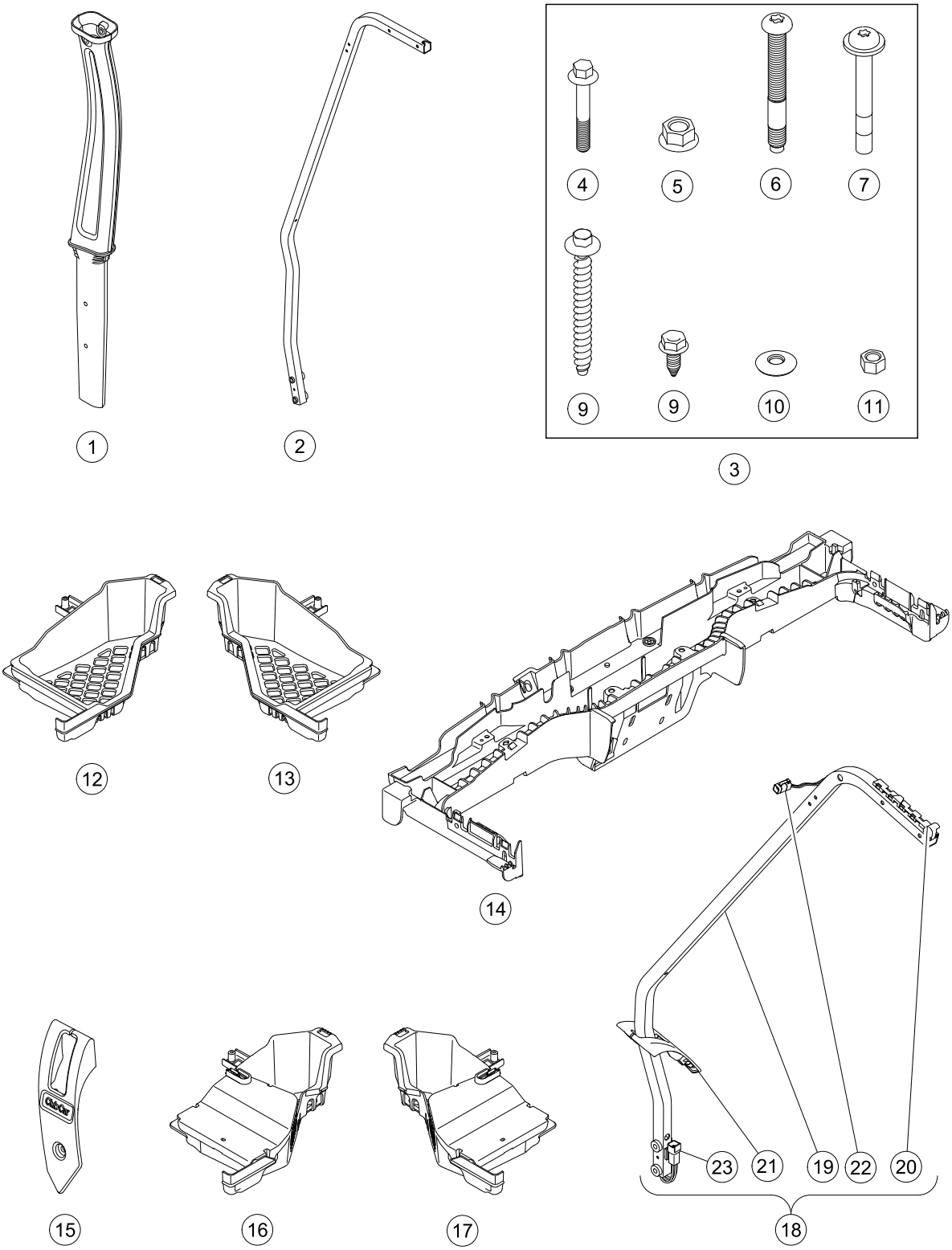
1
2
4
5
6
7
9
9
10
11
3
12
13
14
15
16
17
23
21
19
22
20
18
G-140799-000001

VISAGE CANOPY STRUTS AND CONSOLE

ITEM	PART NO.	DESCRIPTION	QTY
		1 2 3 4	
1	102513501	Asm-rear Canopy Support	2
2	103750101	Strut, Canopy Front, Driver-side	1
3	104008503	Kit, Hardware, Canopy (includes items 4 through 11)	1
4	102296150	Bolt - M6x1.0x50 Hex Flng Hd	4
5	102298401	Nut, M8, All Metal Lock	2
6	102299065	M8-1.25 X 65 Tx Bttn Hd Bolt	4
7	102299360	Screw, M8-1.25 X 60, Sems, Tx	2
8	102299601	Screw, Pt, K80x70 Hex Flg Hd	2
9	102544201	Screw, M6 Hex	2
10	103196001	Washer, Conical Spring, Canopy	8
11	103200301	Nut, M6 x 1.00	4
12	47559264001	Basket, Overhead, Driver-side	1
13	47559264002	Basket, Overhead, Passenger-side	1
14	47559265001	Support, Display Unit	1
15	47589920001	Cover, Strut, LH, Topped	1
16	47613526001	Basket, Spkr, 8 Ohm, Left	1
17	47613526002	Basket, Spkr, 8 Ohm, Right	1
18	47638185001	Asm, Strut, Rh, Visage, 4-pin (includes items 19 through 23)	1
19	103750001	Strut, Canopy Front, Passenger-side	1
20	47559268001	Retainer, Wire Harness	1
21	47589920002	Cover, Strut, RH, Topped	1
22	47625005001	Harness, Visage, Strut, Li-a/c	1
23	47638453001	Mounting Clip, Ampseal 16	1

1

E

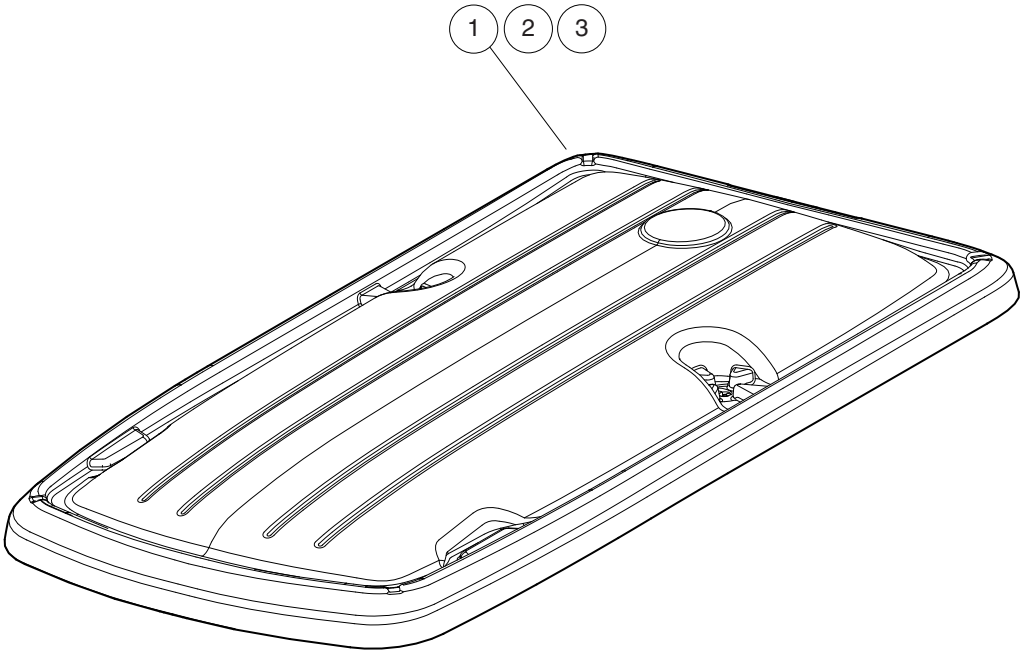

000439-012

FOUR-PASSENGER MONSOON CANOPY

ITEM	PART NO.	DESCRIPTION	QTY
		1 2 3 4	
1	103286201	Asm, Canopy 4p Monsoon Xl, Wht	1
2	103286202	Asm, Canopy 4p Monsoon Xl, Bge	1
3	103286203	Asm, Canopy 4p Monsoon Xl, Blk	1

1

E

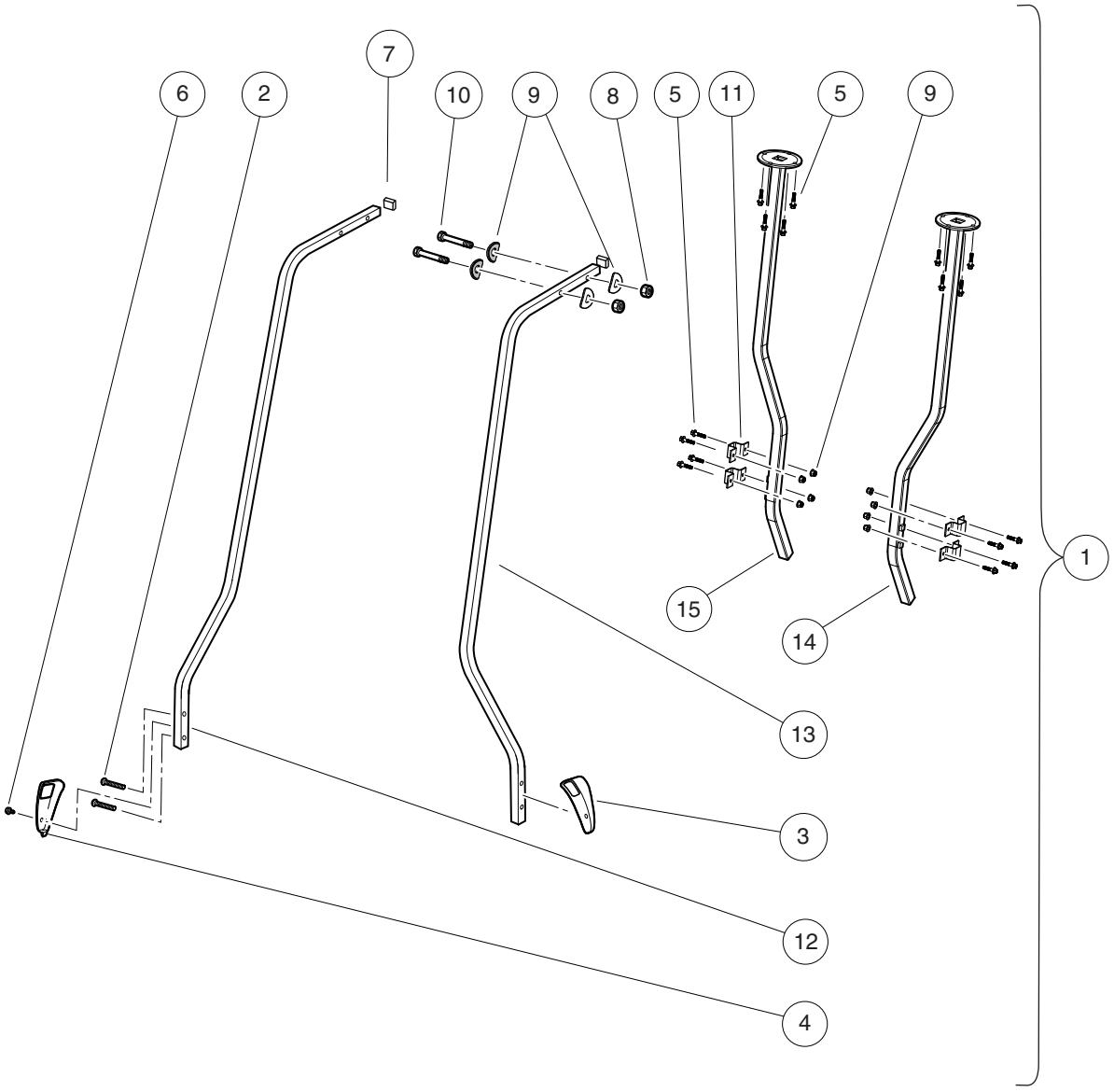

000439-013

FOUR-PASSENGER MONSOON CANOPY STRUTS

ITEM	PART NO.	DESCRIPTION	QTY
		1 2 3 4	
1	103725701	Kit- Canopy 4 Pass Strut (includes items 2 through 15)	1
2	102299065	M8-1.25 X 65 Tx Bttn Hd Bolt	4
3	102400002	Cover, Canopy Support, Driver-side, Black	1
4	102400102	Cover, Canopy Support, Passenger-side, Black	1
5	102541425	Bolt, M6x1.0x25, Hex Flhd, Blk-l	16
6	102544201	Screw, M6 Hex	2
7	102581201	Plug, Square - 25.4 mm	2
8	102621501	Nut, Flange, M6 X 1.0, Nylon	12
9	103196001	Washer, Conical Spring, Canopy	8
10	103199301	Bolt - M6 X 1 X 45 Hh Grey	4
11	103653201	Bracket- Hat, Strut	4
12	103750001	Strut, Canopy Front, Passenger-side	1
13	103750101	Strut, Canopy Front, Driver-side	1
14	103816401	Weldment- Drain Strut, Drv	1
15	103816402	Weldment- Drain Strut, Pas	1

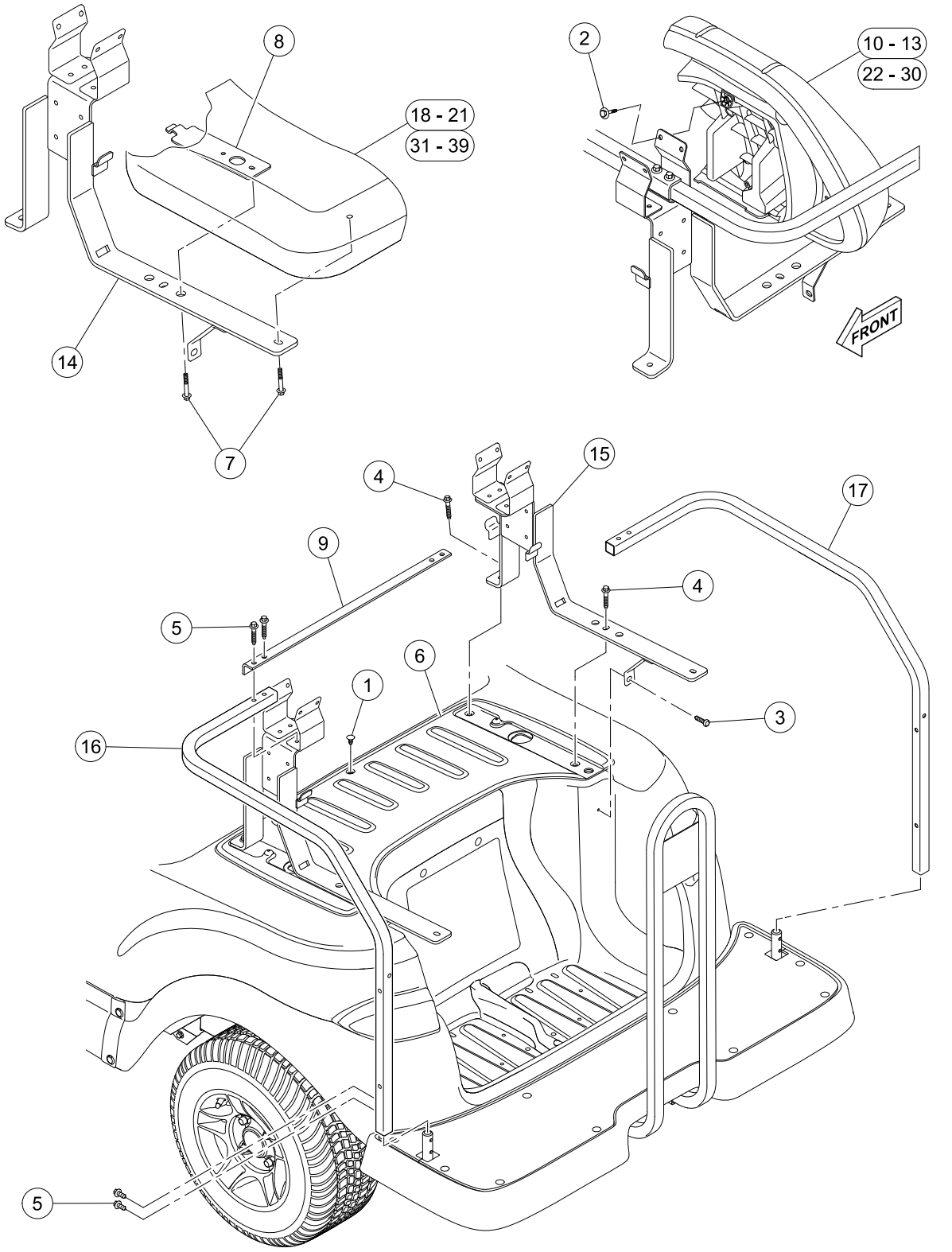
8
18 - 21
31 - 39
14
7
2
10 - 13
22 - 30
FRONT
15
4
17
9
4
5
6
1
3
16
5
G-140699-000001

REAR SEAT – FIXED

ITEM	PART NO.	DESCRIPTION	QTY
		1 2 3 4	
1	1010434	Barrel - Plastic	10
2	102296530	Screw - M6 X 1.0 X 30 Sems	4
3	102298030	Screw, K80x30, Torx Pn Hd Pt	2
4	102298240	Bolt, Flange Head, M8-1.25 X 40	1
5	102298745	M8-1.25x45 Taptite	10
6	102531502	Cover- 4 Pass W/canopy	1
7	102541425	Bolt, M6x1.0x25, Hex Flhd, Blk-l	4
8	102573101	Bracket, 4-pass Lower Seat	2
9	103653001	Angle, Strut, Tie	1
10	103853121	Asm, Seat Back, Beige, Service Replacement	1
11	103853122	Asm, Seat Back, White, Service Replacement	1
12	103853124	Asm, Seat Back, Gray, Service Replacement	1
13	103853125	Asm, Seat Back, Black, Service Replacement	1
14	103866801	Weldment, Sprt, 4pass, Drv	1
15	103866802	Weldment, Sprt, 4pass	1
16	103866901	Restraint-lh 4pass Hip	1
17	103866902	Restraint-rh 4pass Hip	1
18	105101221	Service, Beige, 4pass Rear Btm	1
19	105101222	Service, White, 4pass Rear Btm	1
20	105101224	Service, Gray, 4pass Rear Btm	1
21	105101225	Service, Black, 4pass Rear Btm	1
22	47564888021	Asm, Seat Back, Rear, Lt. Beige, Service Replacement	1
23	47564888022	Asm, Seat Back, Rear, Camello, Service Replacement	1
24	47564888023	Asm, Seat Back, Rear, Off-White, Service Replacement	1
25	47564888024	Asm, Seat Back, Rear, Camello/Lt. Beige, Service Replacement	1
26	47564888025	Asm, Seat Back, Rear, Camello/Off-White, Service Replacement	1
27	47564888026	Asm, Seat Back, Rear, Lt. Beige/Off-White, Service Replacement	1
28	47564888027	Asm, Seat Back, Rear, Black, Service Replacement	1
29	47564888028	Asm, Seat Back, Rear, Black/Gray, Service Replacement	1
30	47564888029	Asm,bk,rr,gray,srvc,prem	1
31	47564888029	Asm,bk,rr,gray,srvc,prem	1
32	47564889021	Asm, Seat Bottom, Rear, Lt. Beige, Service Replacement	1
33	47564889022	Asm, Seat Bottom, Rear, Camello, Service Replacement	1
34	47564889023	Asm, Seat Bottom, Rear, Off-White, Service Replacement	1
35	47564889024	Asm, Seat Bottom, Rear, Camello/Lt. Beige, Service Replacement	1
36	47564889025	Asm, Seat Bottom, Rear, Camello/Off-White, Service Replacement	1
37	47564889026	Asm, Seat Bottom, Rear, Lt. Beige/Off-White, Service Replacement	1
38	47564889027	Asm, Seat Bottom, Rear, Black, Service Replacement	1
39	47564889028	Asm, Seat Bottom, Rear, Black/Gray, Service Replacement	1

1

E

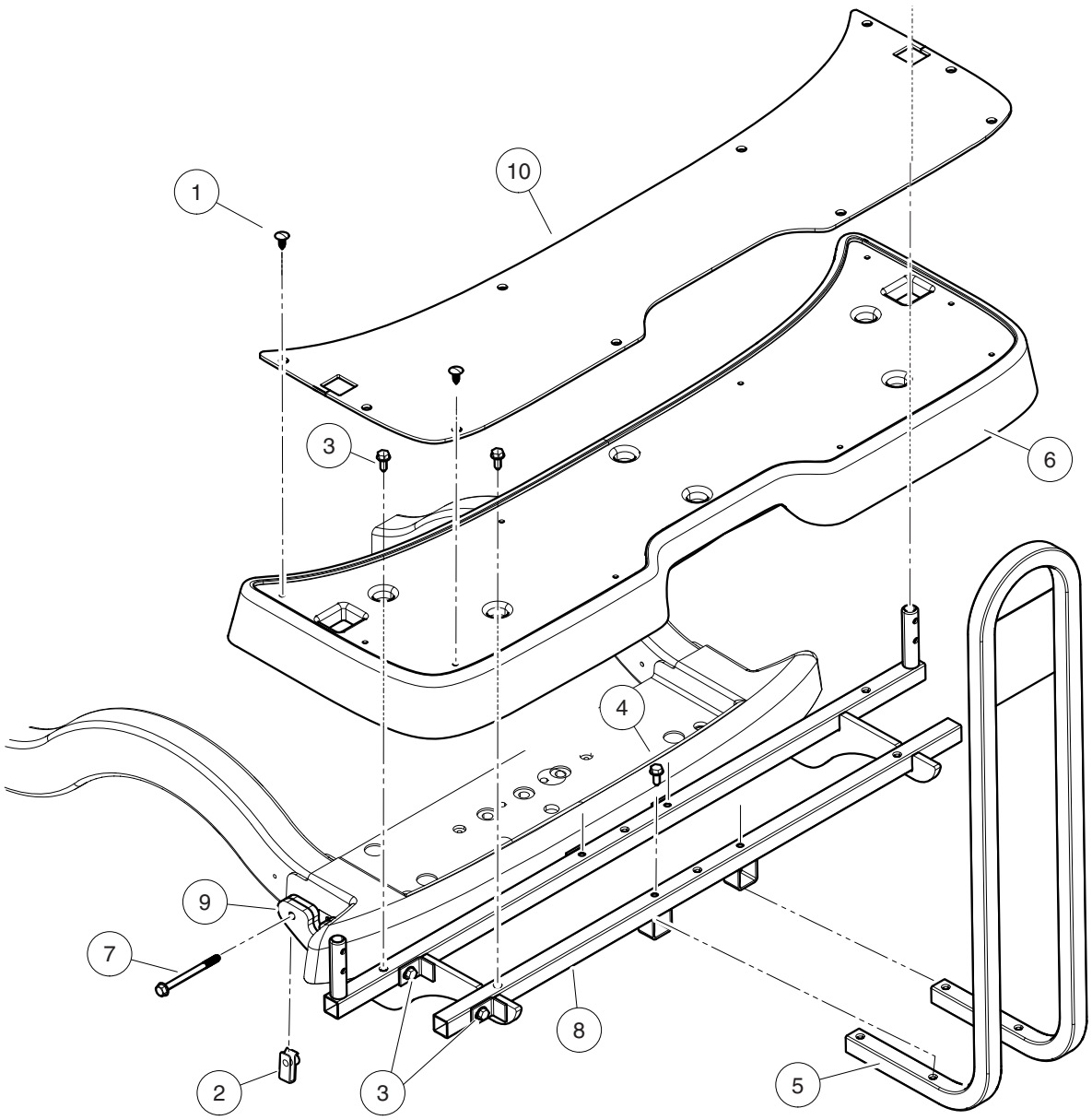

000493-004

REAR FOOTDECK ASSEMBLY

ITEM	PART NO.	DESCRIPTION	QTY
		1 2 3 4	
1	1010434	Barrel - Plastic	10
2	102298601	J-clip - M8 X 1.25	4
3	102298720	Screw, M8-1.25x20, Taptite	8
4	102298745	M8-1.25x45 Taptite	4
5	102531001	Handrail Weldment, Rear Seat	1
6	102531402	Footdeck, 4-Passenger, Black	1
7	102534201	Bolt - Fl Hd, M8 X 95	4
8	102584701	Weld, 4-pass Footdeck-a	1
9	102584801	Weld, 4-pass Footdeck-b	1
10	103922401	Floormat, 4-pass, Rear	1

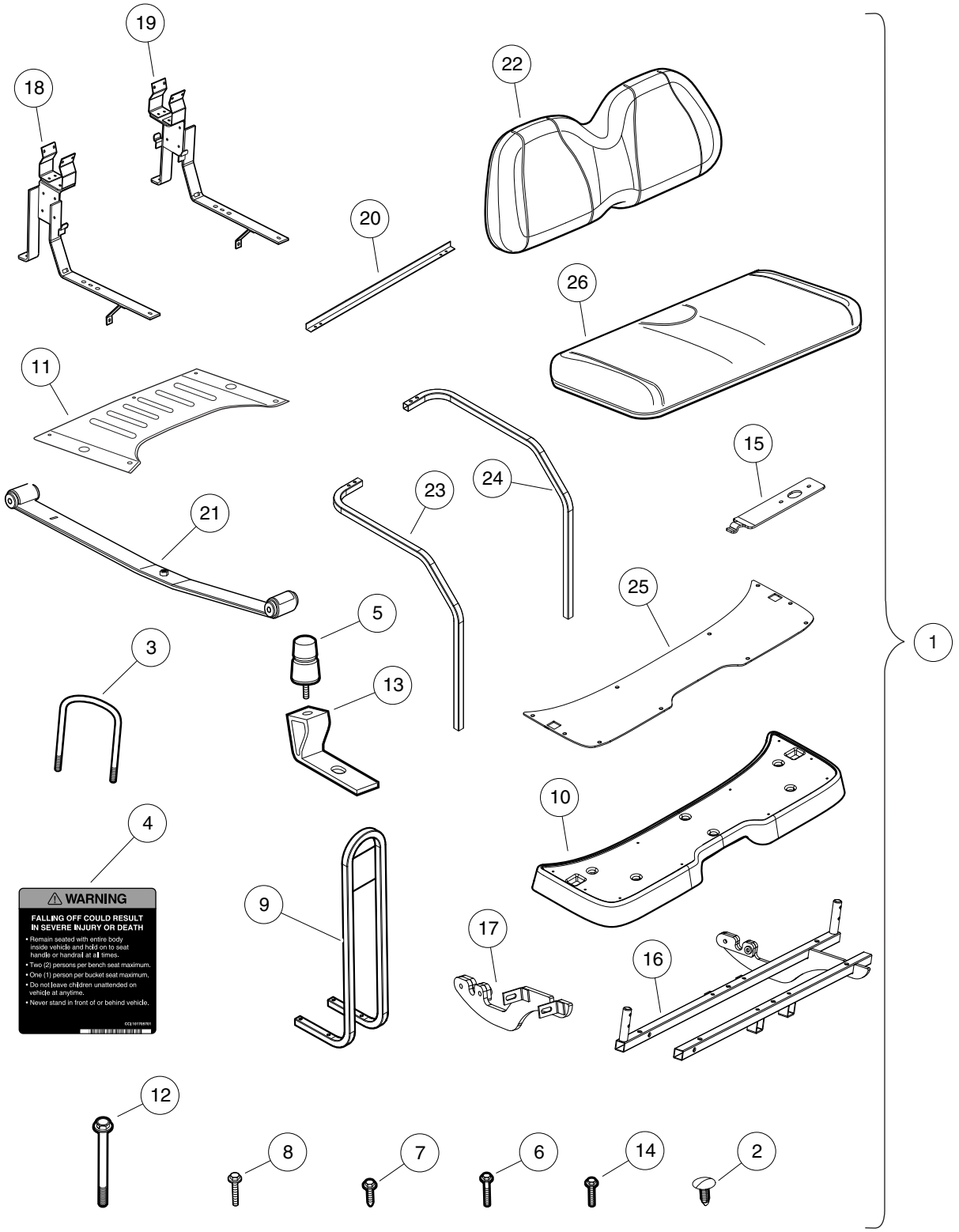
19
18
22
20
26
11
15
24
23
21
25
5
3
13
1
10
4
9
17
16
12
8
7
6
14
2
⚠ WARNING
FALLING OFF COULD RESULT IN SEVERE INJURY OR DEATH
• Remain seated with entire body inside vehicle and hold on to seat handle or handrail at all times.
• Two (2) persons per bench seat maximum.
• One (1) person per bucket seat maximum.
• Do not leave children unattended on vehicle at anytime.
• Never stand in front of or behind vehicle.

000505-008

FOUR PASSENGER CONVERSION KIT, MONSOON – BEIGE

ITEM	PART NO.	DESCRIPTION	QTY
		1 2 3 4	
1	102570905	Kit-4pass, Monsoon Xl, Beige (includes items 2 through 26)	1
2	1010434	Barrel - Plastic	11
3	1014902	U-Bolt	2
4	101705701	Decal, Warning	1
5	1017235	Bumper, Jounce	2
6	102296530	Screw - M6 X 1.0 X 30 Sems	4
7	102298720	Screw, M8-1.25x20, Taptite	12
8	102298745	M8-1.25x45 Taptite	8
9	102531001	Handrail Weldment, Rear Seat	1
10	102531402	Footdeck, 4-Passenger, Black	1
11	102531502	Cover- 4 Pass W/canopy	1
12	102534201	Bolt - Fl Hd, M8 X 95	4
13	102534801	Jounce Bumper Bracket	2
14	102541425	Bolt, M6x1.0x25, Hex Flhd, Blk-l	6
15	102573101	Bracket, 4-pass Lower Seat	2
16	102584701	Weld, 4-pass Footdeck-a	1
17	102584801	Weld, 4-pass Footdeck-b	1
18	103624601	Weldment, Spt, 4pass, Drv	1
19	103624602	Weldment, Spt, 4pass, Pas	1
20	103653001	Angle, Strut, Tie	1
21	103742303	Asm, Rear Leaf Spring, 4-Passenger	2
22	103853121	Asm, Seat Back, Beige, Service Replacement	1
23	103866901	Restraint-lh 4pass Hip	1
24	103866902	Restraint-rh 4pass Hip	1
25	103922401	Floormat, 4-pass, Rear	1
26	105101221	Service, Beige, 4pass Rear Btm	1

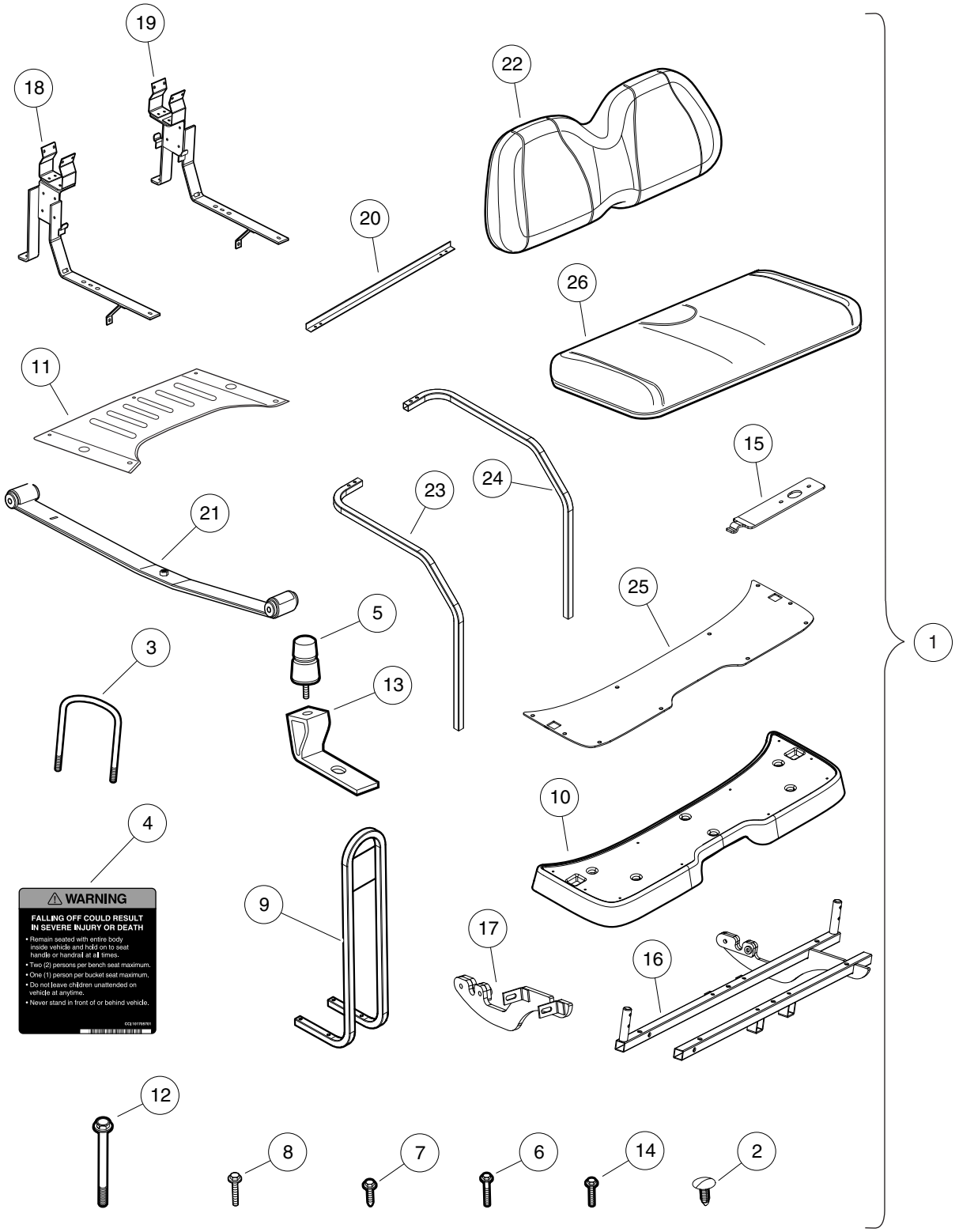
19
18
22
20
26
11
15
24
23
21
25
5
3
13
1
10
4
9
17
16
12
8
7
6
14
2
⚠ WARNING
FALLING OFF COULD RESULT IN SEVERE INJURY OR DEATH
• Remain seated with entire body inside vehicle and hold on to seat handle or handrail at all times.
• Two (2) persons per bench seat maximum.
• One (1) person per bucket seat maximum.
• Do not leave children unattended on vehicle at anytime.
• Never stand in front of or behind vehicle.

000505-008

FOUR PASSENGER CONVERSION KIT, MONSOON – WHITE

ITEM	PART NO.	DESCRIPTION	QTY
		1 2 3 4	
1	102570906	Kit-4pass, Monsoon Xl, White (includes items 2 through 26)	1
2	1010434	Barrel - Plastic	11
3	1014902	U-Bolt	2
4	101705701	Decal, Warning	1
5	1017235	Bumper, Jounce	2
6	102296530	Screw - M6 X 1.0 X 30 Sems	4
7	102298720	Screw, M8-1.25x20, Taptite	12
8	102298745	M8-1.25x45 Taptite	8
9	102531001	Handrail Weldment, Rear Seat	1
10	102531402	Footdeck, 4-Passenger, Black	1
11	102531502	Cover- 4 Pass W/canopy	1
12	102534201	Bolt - Fl Hd, M8 X 95	4
13	102534801	Jounce Bumper Bracket	2
14	102541425	Bolt, M6x1.0x25, Hex Flhd, Blk-l	6
15	102573101	Bracket, 4-pass Lower Seat	2
16	102584701	Weld, 4-pass Footdeck-a	1
17	102584801	Weld, 4-pass Footdeck-b	1
18	103624601	Weldment, Spt, 4pass, Drv	1
19	103624602	Weldment, Spt, 4pass, Pas	1
20	103653001	Angle, Strut, Tie	1
21	103742303	Asm, Rear Leaf Spring, 4-Passenger	2
22	103853122	Asm, Seat Back, White, Service Replacement	1
23	103866901	Restraint-lh 4pass Hip	1
24	103866902	Restraint-rh 4pass Hip	1
25	103922401	Floormat, 4-pass, Rear	1
26	105101222	Service, White, 4pass Rear Btm	1

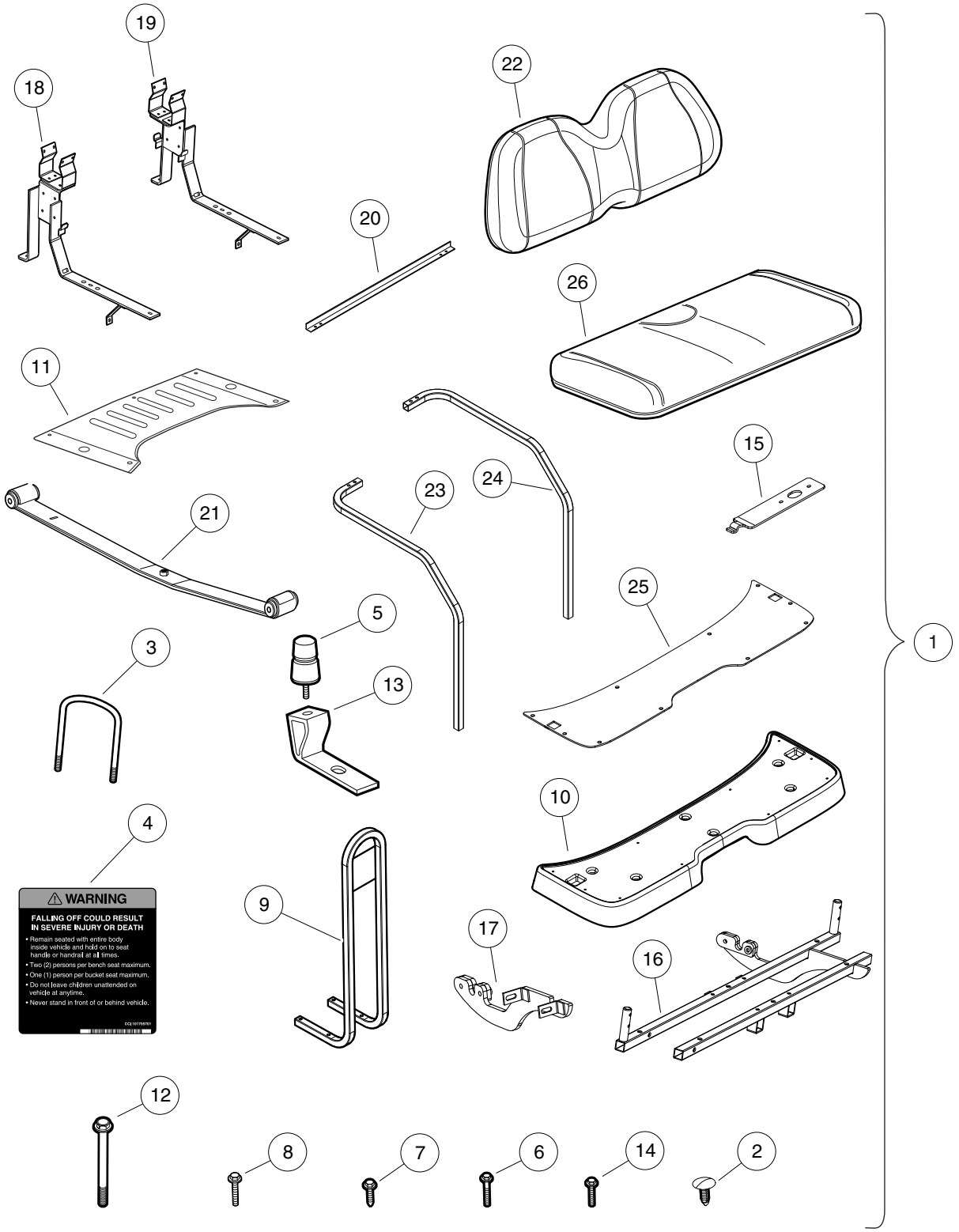
19
18
22
20
26
11
15
24
23
21
25
5
3
13
1
10
4
9
17
16
12
8
7
6
14
2
⚠ WARNING
FALLING OFF COULD RESULT IN SEVERE INJURY OR DEATH
• Remain seated with entire body inside vehicle and hold on to seat handle or handrail at all times.
• Two (2) persons per bench seat maximum.
• One (1) person per bucket seat maximum.
• Do not leave children unattended on vehicle at anytime.
• Never stand in front of or behind vehicle.

000505-008

FOUR PASSENGER CONVERSION KIT, MONSOON – GRAY

ITEM	PART NO.	DESCRIPTION	QTY
		1 2 3 4	
1	102570907	Kit-4pass, Monsoon Xl, Gray (includes items 2 through 26)	1
2	1010434	Barrel - Plastic	11
3	1014902	U-Bolt	2
4	101705701	Decal, Warning	1
5	1017235	Bumper, Jounce	2
6	102296530	Screw - M6 X 1.0 X 30 Sems	4
7	102298720	Screw, M8-1.25x20, Taptite	12
8	102298745	M8-1.25x45 Taptite	8
9	102531001	Handrail Weldment, Rear Seat	1
10	102531402	Footdeck, 4-Passenger, Black	1
11	102531502	Cover- 4 Pass W/canopy	1
12	102534201	Bolt - Fl Hd, M8 X 95	4
13	102534801	Jounce Bumper Bracket	2
14	102541425	Bolt, M6x1.0x25, Hex Flhd, Blk-l	6
15	102573101	Bracket, 4-pass Lower Seat	2
16	102584701	Weld, 4-pass Footdeck-a	1
17	102584801	Weld, 4-pass Footdeck-b	1
18	103624601	Weldment, Spt, 4pass, Drv	1
19	103624602	Weldment, Spt, 4pass, Pas	1
20	103653001	Angle, Strut, Tie	1
21	103742303	Asm, Rear Leaf Spring, 4-Passenger	2
22	103853124	Asm, Seat Back, Gray, Service Replacement	1
23	103866901	Restraint-lh 4pass Hip	1
24	103866902	Restraint-rh 4pass Hip	1
25	103922401	Floormat, 4-pass, Rear	1
26	105101224	Service, Gray, 4pass Rear Btm	1

1

E

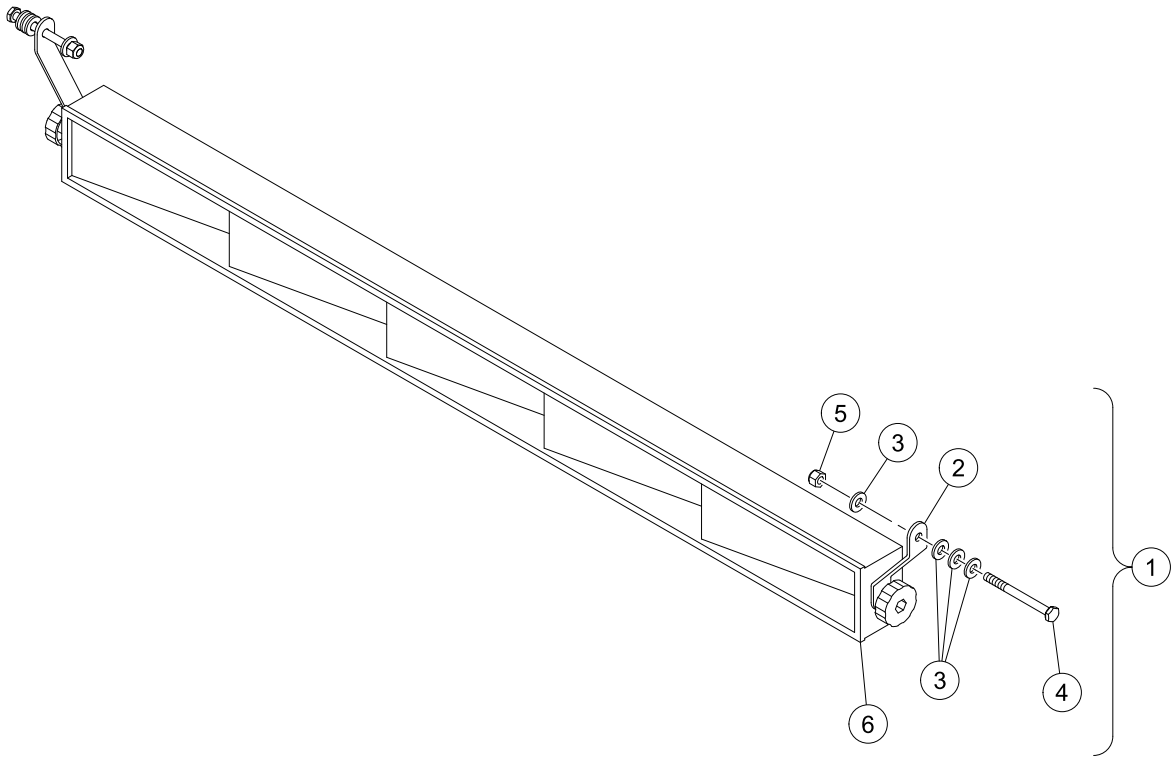

G-141199-000002

5-PANEL MIRROR

ITEM	PART NO.	DESCRIPTION	QTY
		1 2 3 4	
1	105288901	Mirror Kit, Wink (includes items 2 through 6)	1
2	105313801	Brkt, Mirror, 5 Panel, Mtg	2
3	332	Washer, 1/4 Type A Narrow Flat	8
4	7311	Screw, 1/4-20 X 2.00 Hex-Head Cap	2
5	8233	Locknut, 1/4-20, Nylon Insert	2
6	AM10092	ICS 5-Panel Mirror	1

1

E

WHEELS AND TIRES

2

E

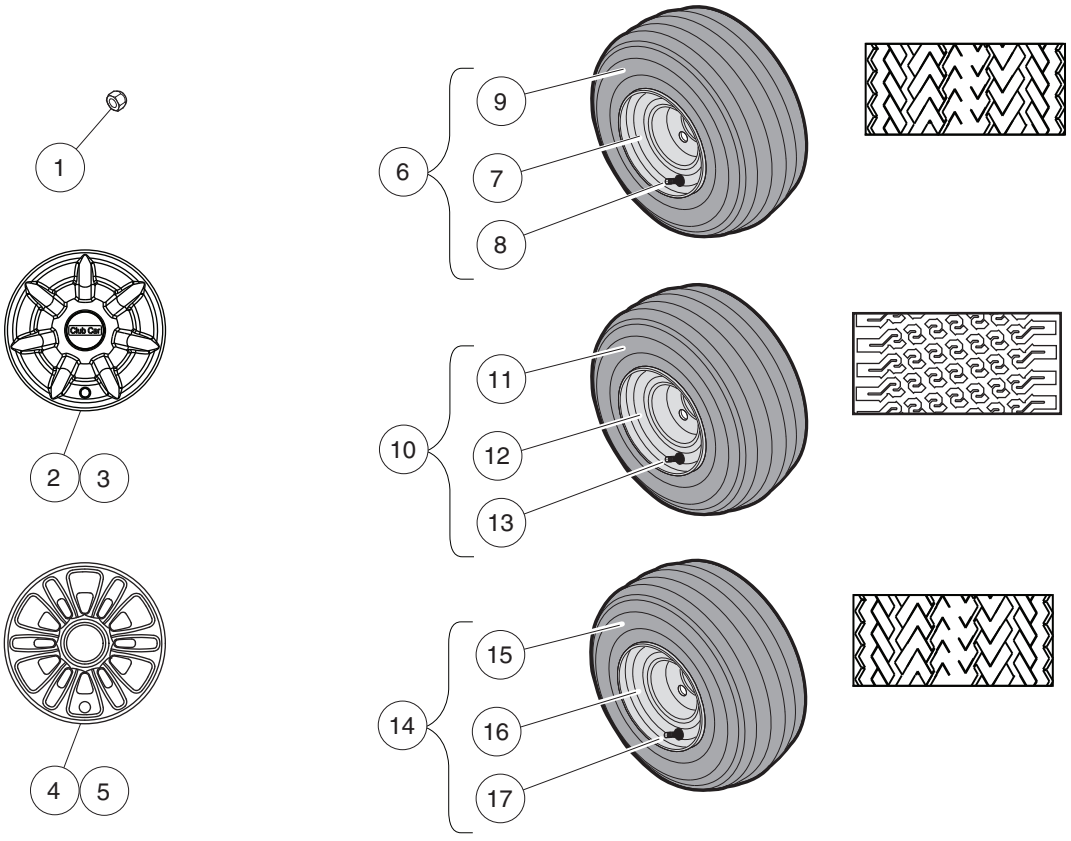

000474-011

8 INCH WHEELS AND TIRES, KENDA

ITEM	PART NO.	DESCRIPTION	QTY
		1 2 3 4	
1	1010984	.500-20 Unf Lug Nut	16
2	102559901	Hub Cap Kit (includes item 3)	1
3	103694501	Hub Cap, 7 Prong	4
4	102559902	Kit, Wheel Cover, 12 Spk (includes item 5)	1
5	105142401	Wheel Cover, 12 Spk, 8", Slvr	4
6	103951001	Assembly, Silver Wheel Kenda, Hn1 4ply (includes items 7 through 9)	4
7	103459104	Wheel Rim, 8"x7", Silver, Std	1
8	7310	Valve Stem, Black Plastic	1
9	AM10682	Unmounted Prem Tire 18x8.50x8	1
10	103951002	Assembly, Silver Wheel Kenda, X/t 6ply (includes items 11 through 13)	4
11	102569302	Tire, Kenda, 18x8.5-8, 6-ply Xtr	1
12	103459104	Wheel Rim, 8"x7", Silver, Std	1
13	7310	Valve Stem, Black Plastic	1
14	103951007	Assembly, Silver Wheel Kenda, Radial (includes items 15 through 17)	4
15	102569311	Tire, Kenda, 18x8.5 R8, 4-ply	1
16	103459104	Wheel Rim, 8"x7", Silver, Std	1
17	7310	Valve Stem, Black Plastic	1

2

E

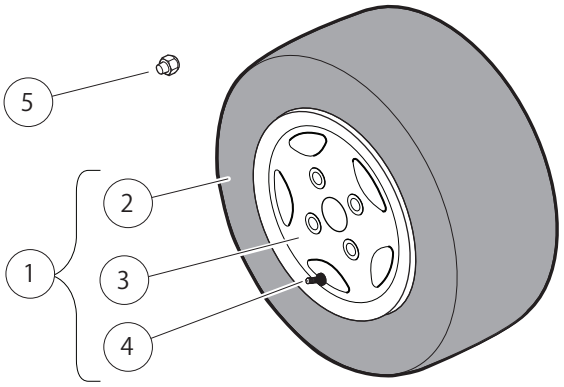

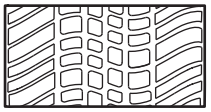

PRO TOUR
Kenda

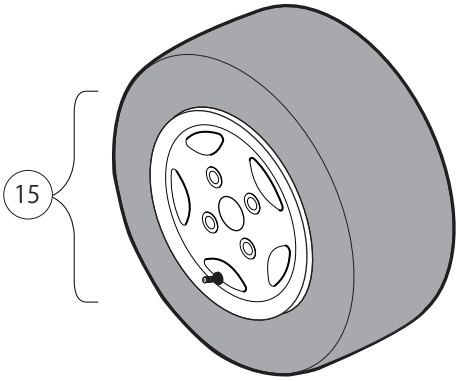

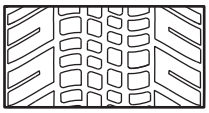

K399
Kenda

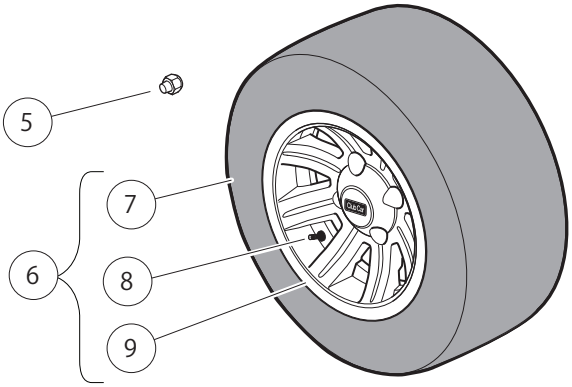

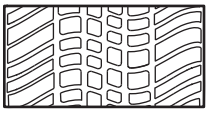

PRO TOUR
Kenda

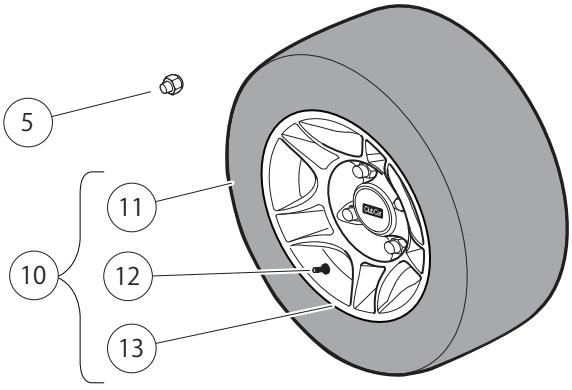

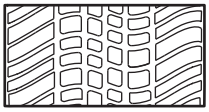

PRO TOUR
Kenda

000475-010

10 INCH WHEELS AND TIRES – CHAMPION AND PRO

ITEM	PART NO.	DESCRIPTION	QTY
		1 2 3 4	
1	102540601	Tire and Wheel, 10" Aluminum, Pro Tour Tire (includes items 2 through 4)	4
2	102556701	Tire, Pro Tour, 205-50 X 10	1
3	102556801	Wheel, Aluminum, Champion	1
4	7310	Valve Stem, Black Plastic	1
5	102540701	Lug Nut, 1/2" Closed End	16
6	103935001	Tire and Wheel, 10", 8 Spoke, Alum. (includes items 7 through 9)	4
7	102556701	Tire, Pro Tour, 205-50 X 10	1
8	103832401	Valve Stem With Cap, Chrome	1
9	103934901	Wheel, Aluminum 10x6, 8 Spoke	1
10	47605157001	Wheel Assy, 10", 5 Spoke (includes items 11 through 14)	4
11	102556701	Tire, Pro Tour, 205-50 X 10	1
12	103832401	Valve Stem With Cap, Chrome	1
13	47597567001	Rim, Aluminum 10x6, 5 Spoke	1
14	47603573001	Cap, Center, Wheel, 5 Spoke	1
15	AM1263401	Tire and Wheel, 10" Alum., Kenda K399 205/50 Tire	4

2

E

DECALS

3

E

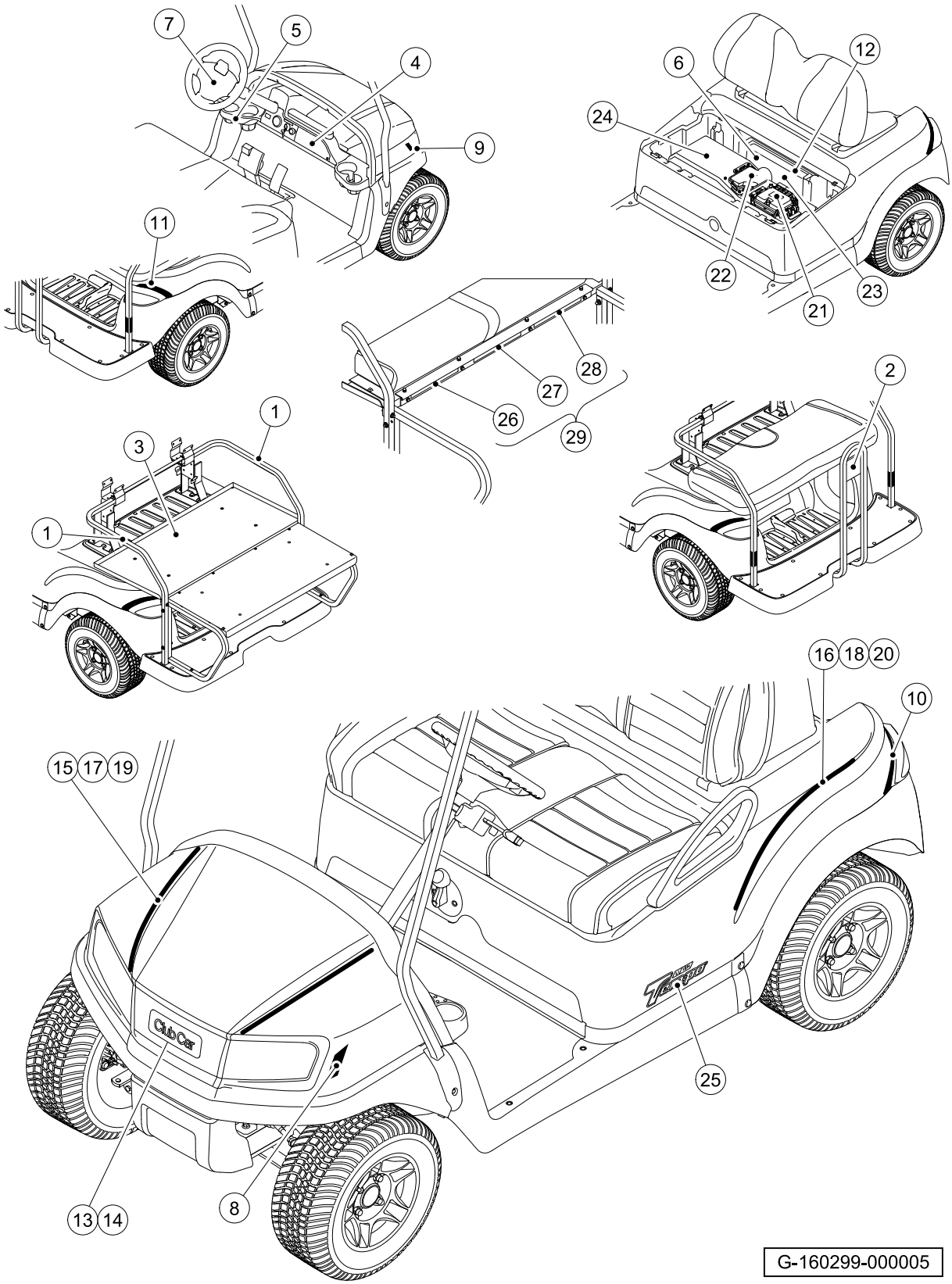
7
5
4
9
11
6
12
24
22
23
21
28
27
26
29
2
1
3
1
16
18
20
10
15
17
19
25
13
14
8
G-160299-000005

ITEM	PART NO.	DESCRIPTION	QTY
		1 2 3 4	
1	101609401	Decal, Crush Area Warning	A/R
2	101705701	Decal, Warning	A/R
3	101972001	Decal, D.s. Box Bed Warning (for vehicles with bed box option)	A/R
4	102519301	Decal, Warning, Rollover	A/R
5	102555901	Decal, Private Speed	A/R
6	103384601	Decal-water Exposure	A/R
7	103783001	Decal, Op Instr, Ele	A/R
8	47583296001	Reflector, Front, Csmr, Driver-side	A/R
9	47583296002	Reflector, Front, Csmr, Passenger-side	A/R
10	47583297001	Reflector, Rear, Csmr, Driver-side	A/R
11	47583297002	Reflector, Rear, Csmr, Passenger-side	A/R
12	47586191001	Decal, Compliance, Mirrors	A/R
13	47614573001	Stripe, Accent, Gold, Front	A/R
14	47614573002	Stripe, Accent, Gold, Rear	A/R
15	47614573003	Stripe, Accent, Black, Front	A/R
16	47614573004	Stripe, Accent, Black, Rear	A/R
17	47614573005	Stripe, Accent, Silver, Front	A/R
18	47614573006	Stripe, Accent, Silver, Rear	A/R
19	47620652001	Controller, Vcm, Li, Ev2106b01	A/R
20	47624328001	Decal, Hazard, Cvr	A/R
21	47624651001	Decal, Warning, Li, Run Tow	A/R
22	47628717001	Decal, Hazard, Battery, Li	A/R
23	47642157001	Decal, Li-Ion, Gold	A/R
24	SVP370601	Decal, Warn 800 850 Prec Fld L	A/R
25	SVP370701	Decal, Warn 800 850 Prec Fld M	A/R
26	SVP370801	Decal, Warn 800 850 Prec Fld R	A/R
27	SVP370901	Asm, Decal, Warn 800 850 Prec	A/R
		Note: Item 27 decal assembly contains decals 24, 25 and 26	

3

E

LIGHTS, CONTROLS AND INDICATORS

4

E

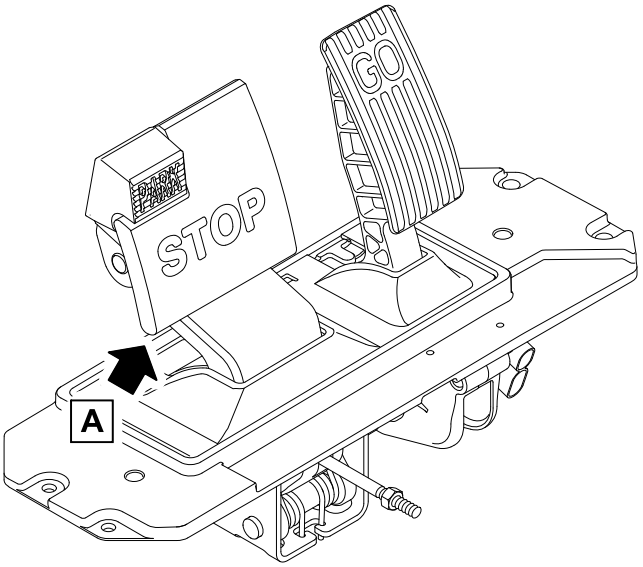

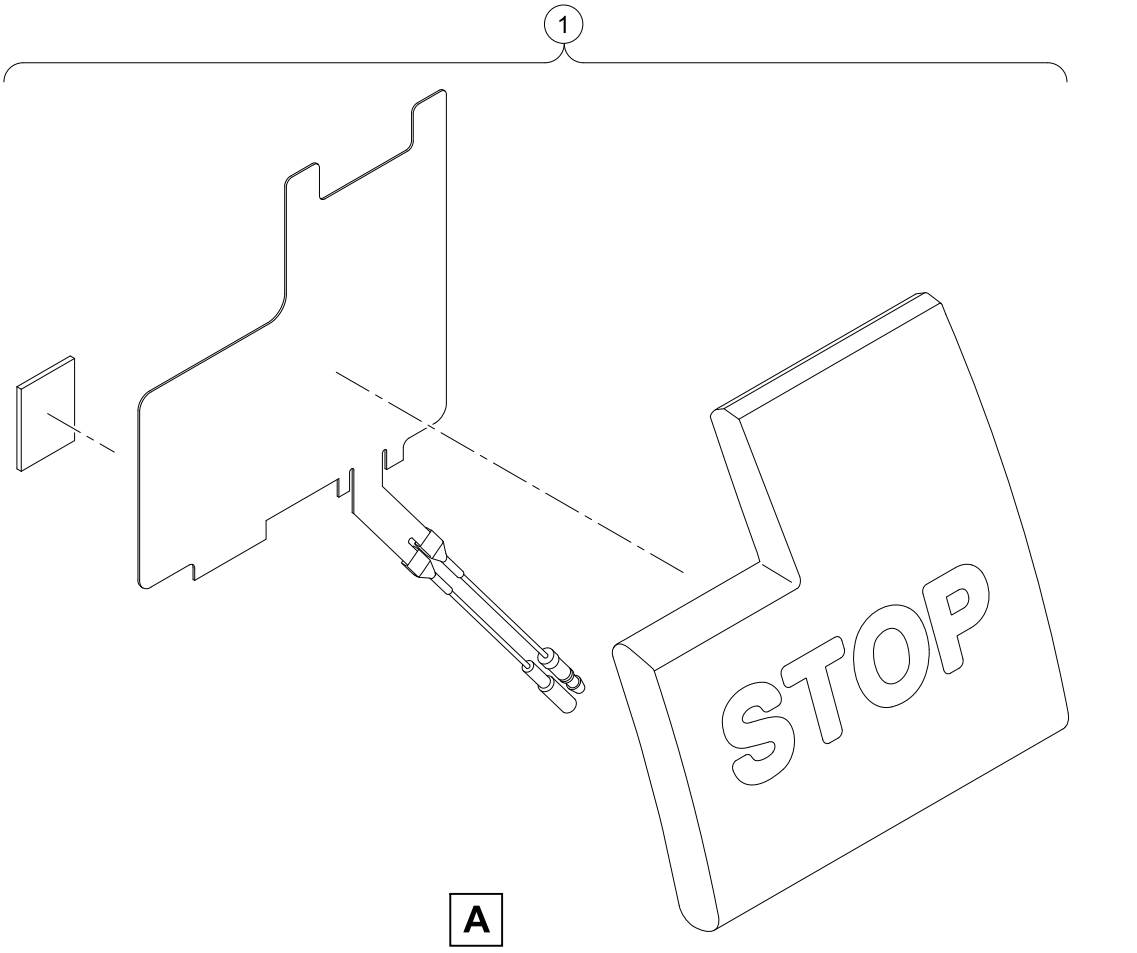

G-080099-000001

BRAKE LIGHT SWITCH KIT

ITEM	PART NO.	DESCRIPTION	QTY
		1 2 3 4	
1	103597101	Kit, Brake Light Switch	1

4

E

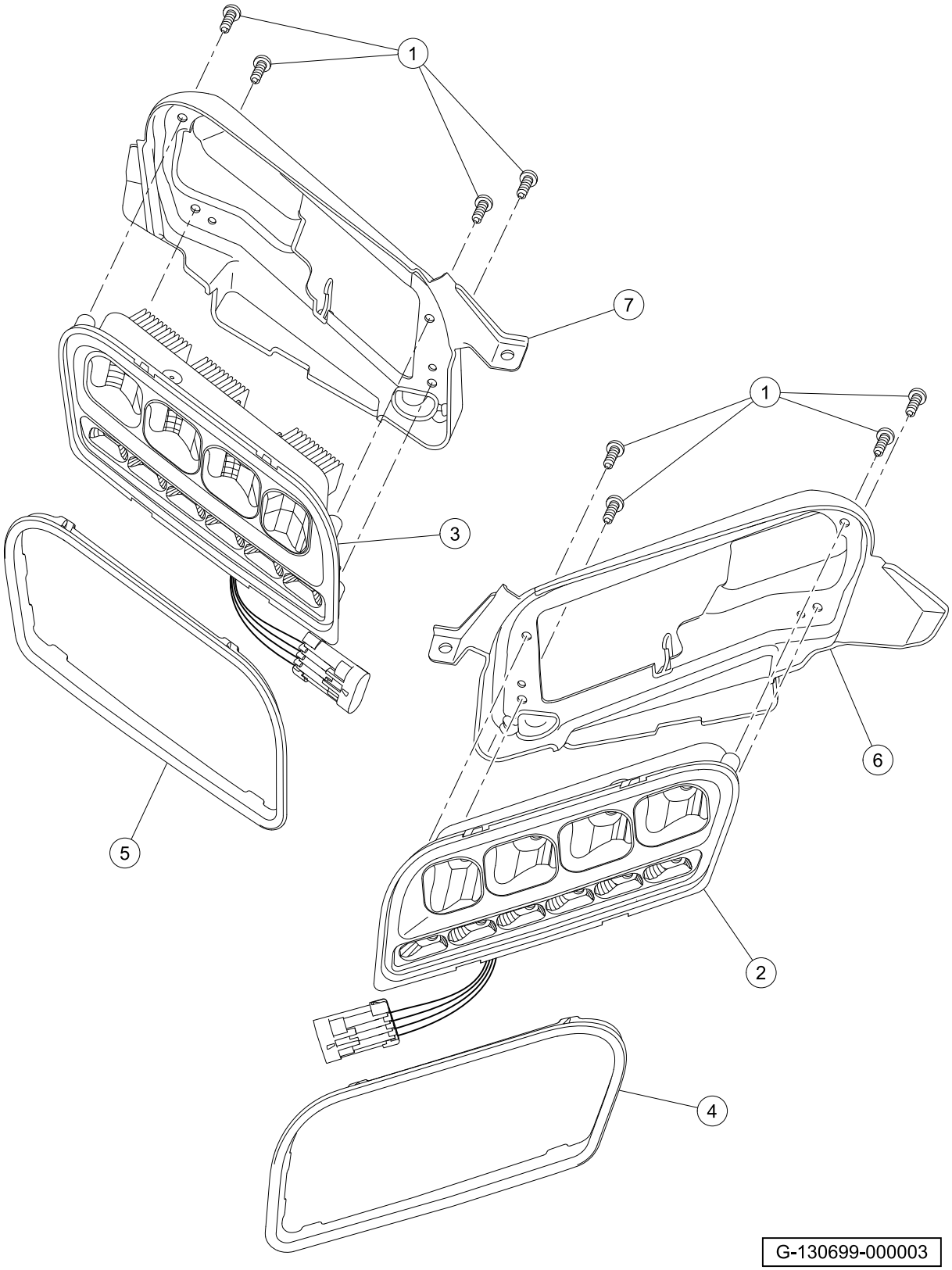

ITEM	PART NO.	DESCRIPTION	QTY
		1 2 3 4	
1	102296020	Screw-torx Pan Head Pt, M6x20	10
2	47565234007	Asm, Headlight, Led, Lh, Sp	1
3	47565234008	Asm, Headlight, Led, Rh, Sp	1
4	47593001001	Bezel, Headlight, Lh	1
5	47593001002	Bezel, Headlight, Rh	1
6	47593002001	Housing, Headlight, Driver	1
7	47593002002	Housing, Headlight, Passenger	1

4

E

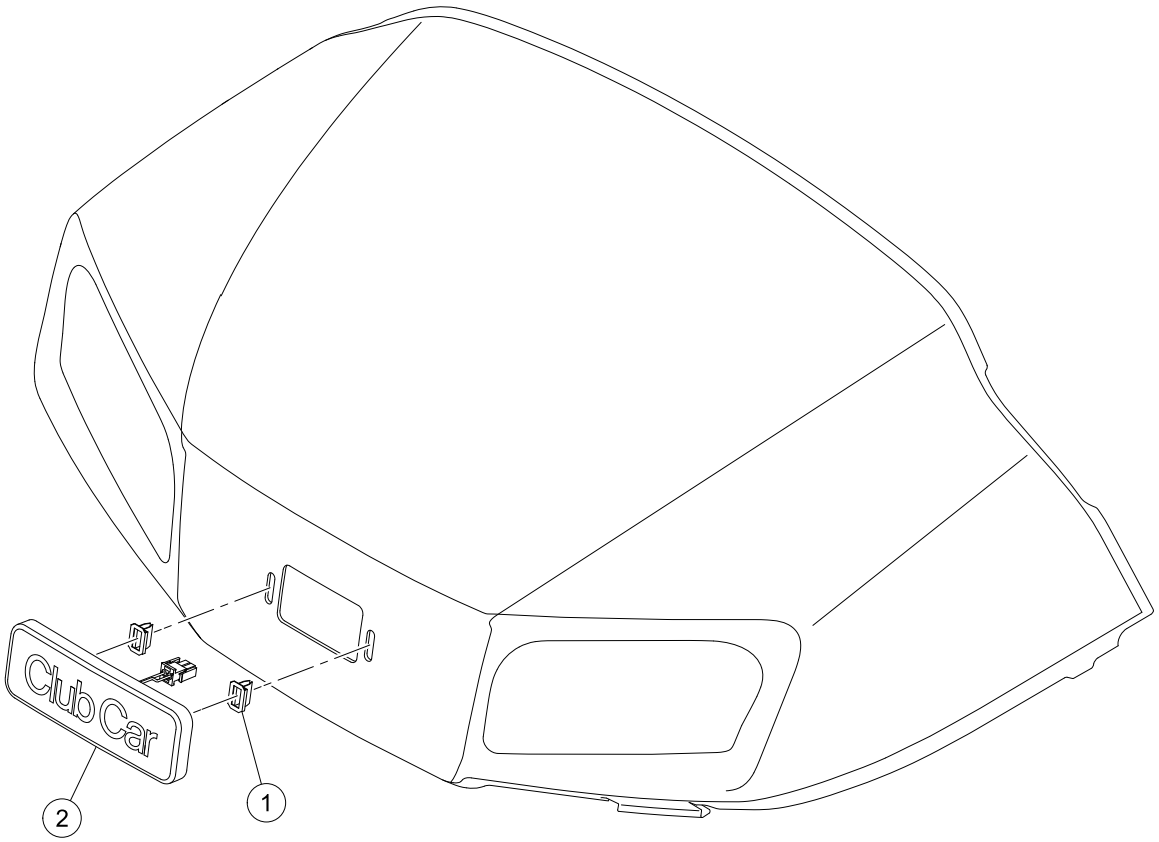

G-160299-000004

ILLUMINATED LOGO

ITEM	PART NO.	DESCRIPTION	QTY
		1 2 3 4	
1	102292701	Clip-body-trim	2
2	47609283001	Asm, Decal, Led	1

4

E

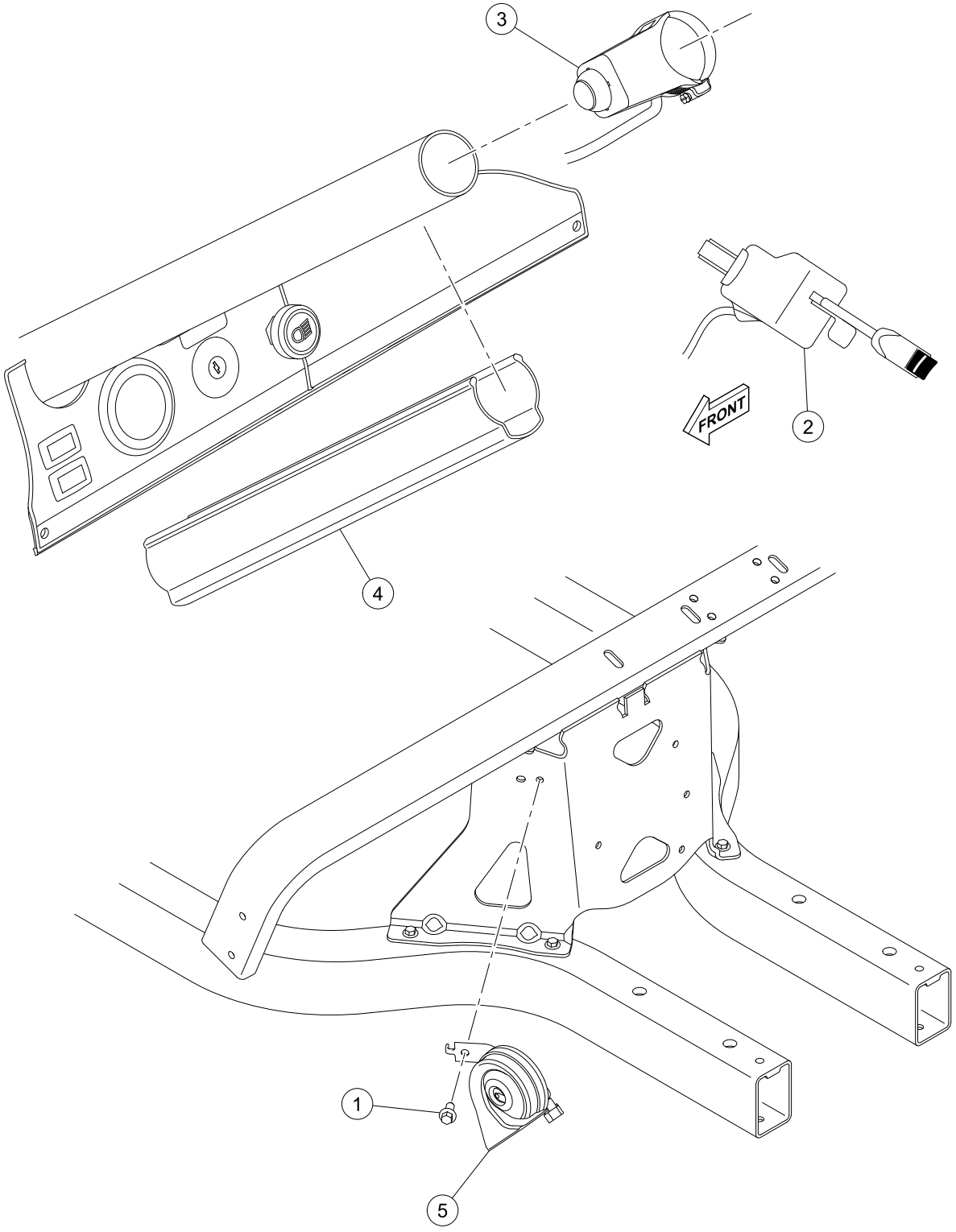

G-130599-000001

TURN SIGNAL LEVER AND HORN

ITEM	PART NO.	DESCRIPTION	QTY
		1 2 3 4	
1	102298720	Screw, M8-1.25x20, Taptite	1
2	102517501	Turn Signal Asm	1
3	102517601	Subasm, Horn Button Harness	1
4	102529201	Wire Cover, Steering Column	1
5	102535401	Horn	1

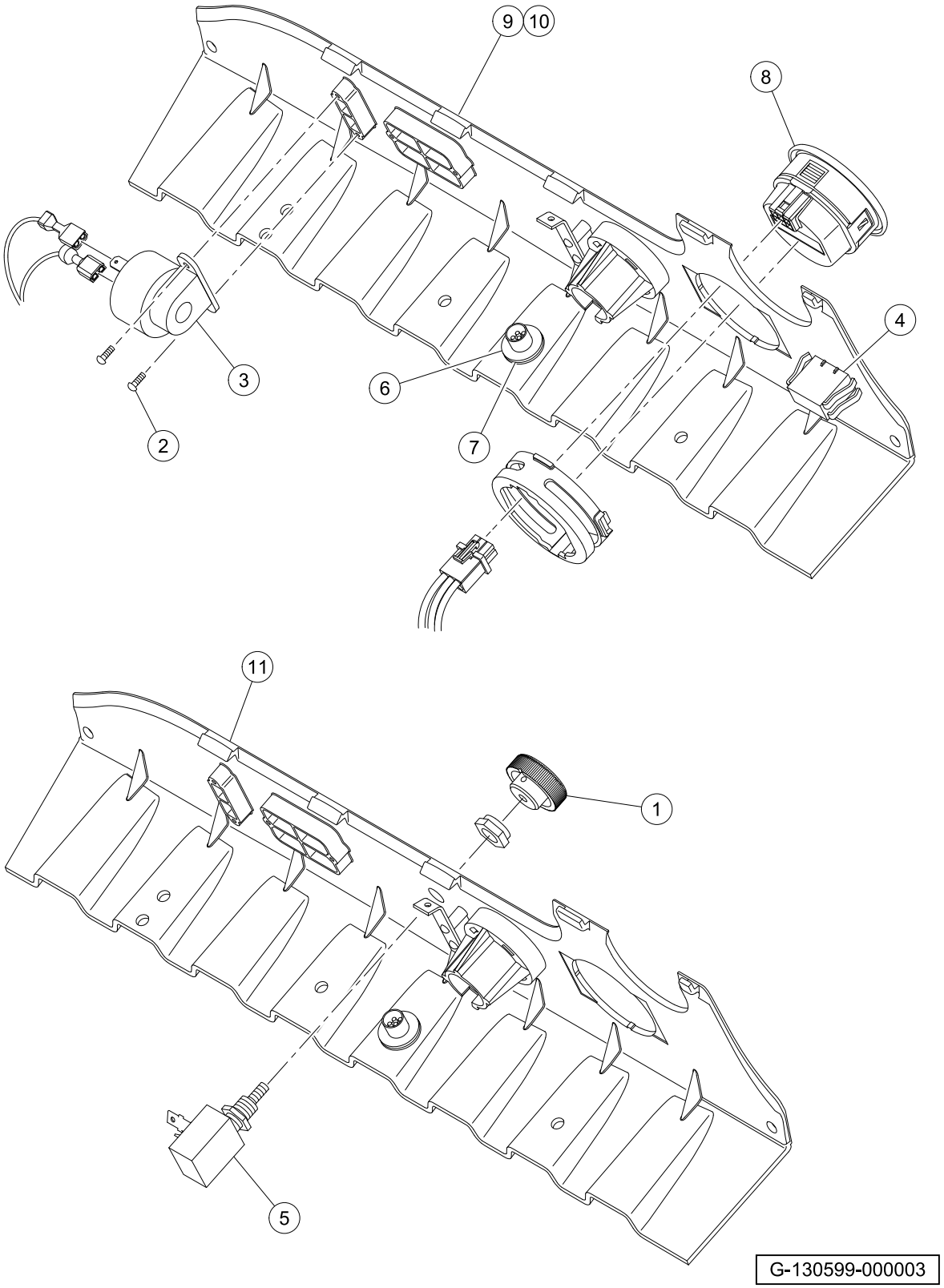
9
10
8
4
3
6
2
7
11
1
5
G-130599-000003

ITEM	PART NO.	DESCRIPTION	QTY
		1 2 3 4	
1	1013857	Knob, Light Switch	1
2	1016849	Screw, #4-24 X 0.33, Pan-Head, Machine	2
3	1016851	Multi-Purpose Buzzer (9-48 VDC)	1
4	101802602	Plug, Hole, Matte	1
5	102051901	Switch, Light	1
6	102196901	Dust Cap	1
7	102572401	Nut, Diagnostic Port	1
8	47614736001	Gauge, Can, Model 3140	1
9	47631631001	IP, w/ Dash Display, Li-Ion	1
10	47631631002	IP, w/ Dash Display and pre wired harness, Li-Ion	1
11	47631631003	IP, w/ Dash Display, Lt Sw, Li-Ion	1

4

E

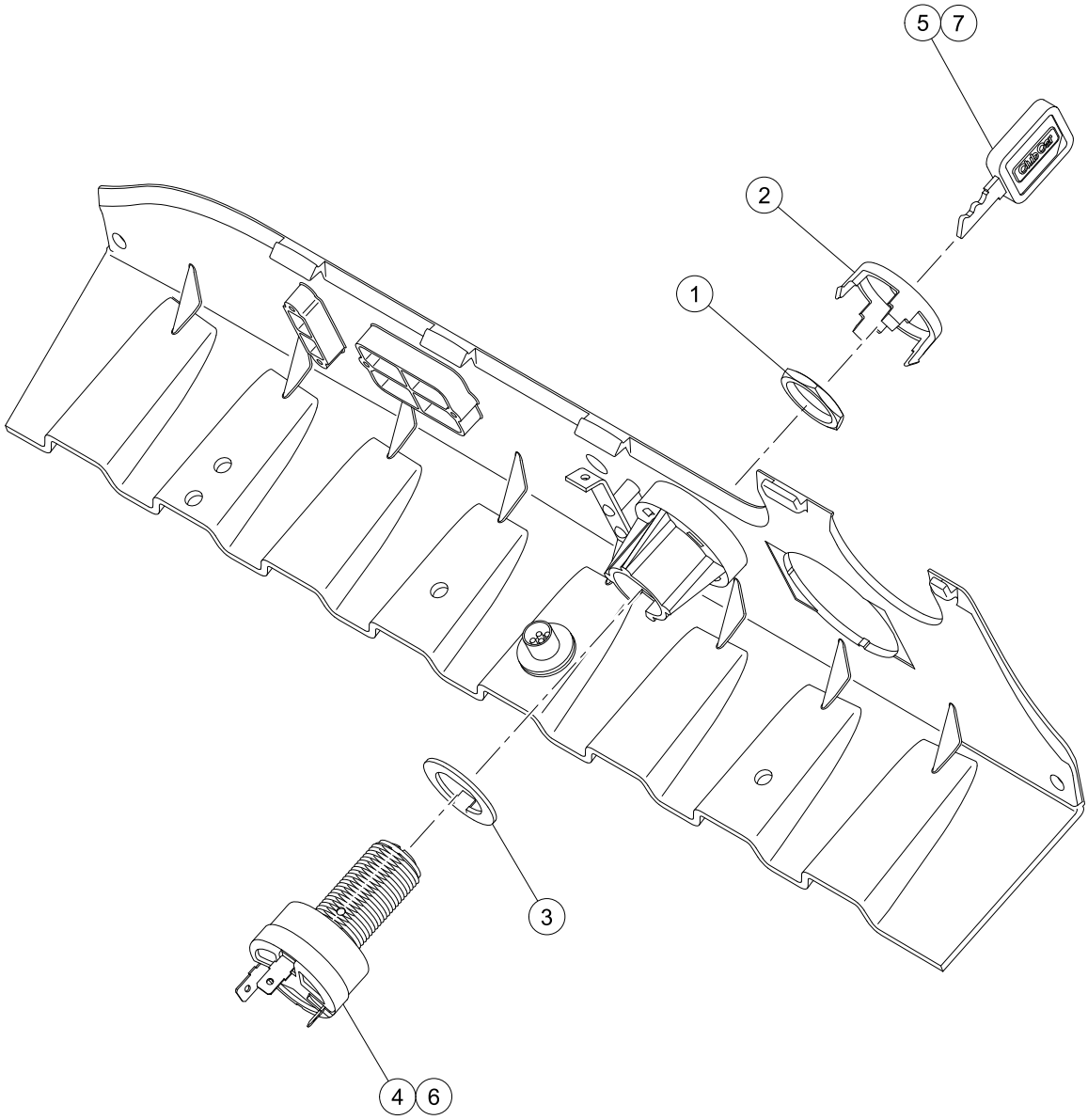

G-130499-000001

ITEM	PART NO.	DESCRIPTION	QTY
		1 2 3 4	
1	101830701	Nut, Key Switch	1
2	101834502	Cap, Black Key Switch	1
3	101851101	Washer, Key Switch	1
4	105082001	Keysw, Uncom, 4t, Off/p2/p3 1a (includes item 5)	1
5	105068001	Key, Uncommon, Padded 1a	1
6	105082002	Keysw, Uncom, 4t, Off/p2/p3 1b (includes item 7)	1
7	105068002	Key, Uncommon, Padded 1b	1

4

E

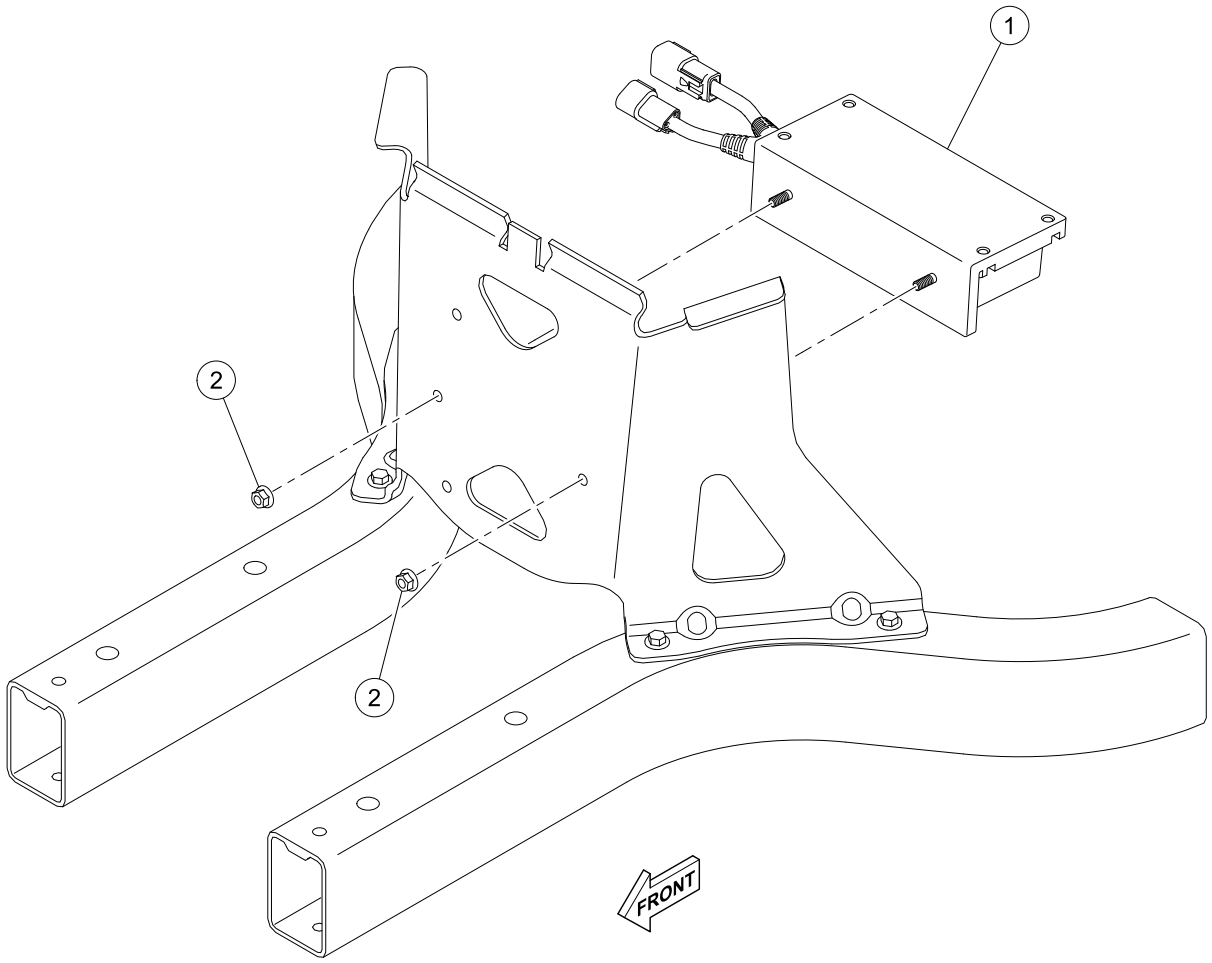

G-130299-000001

DC CONVERTER – ELECTRIC VEHICLE

ITEM	PART NO.	DESCRIPTION	QTY
		1 2 3 4	
1	47594727001	Converter, Dc/dc	1
2	96704176	Nut, Flanged, M6 X 1, Serrated	2

4

E

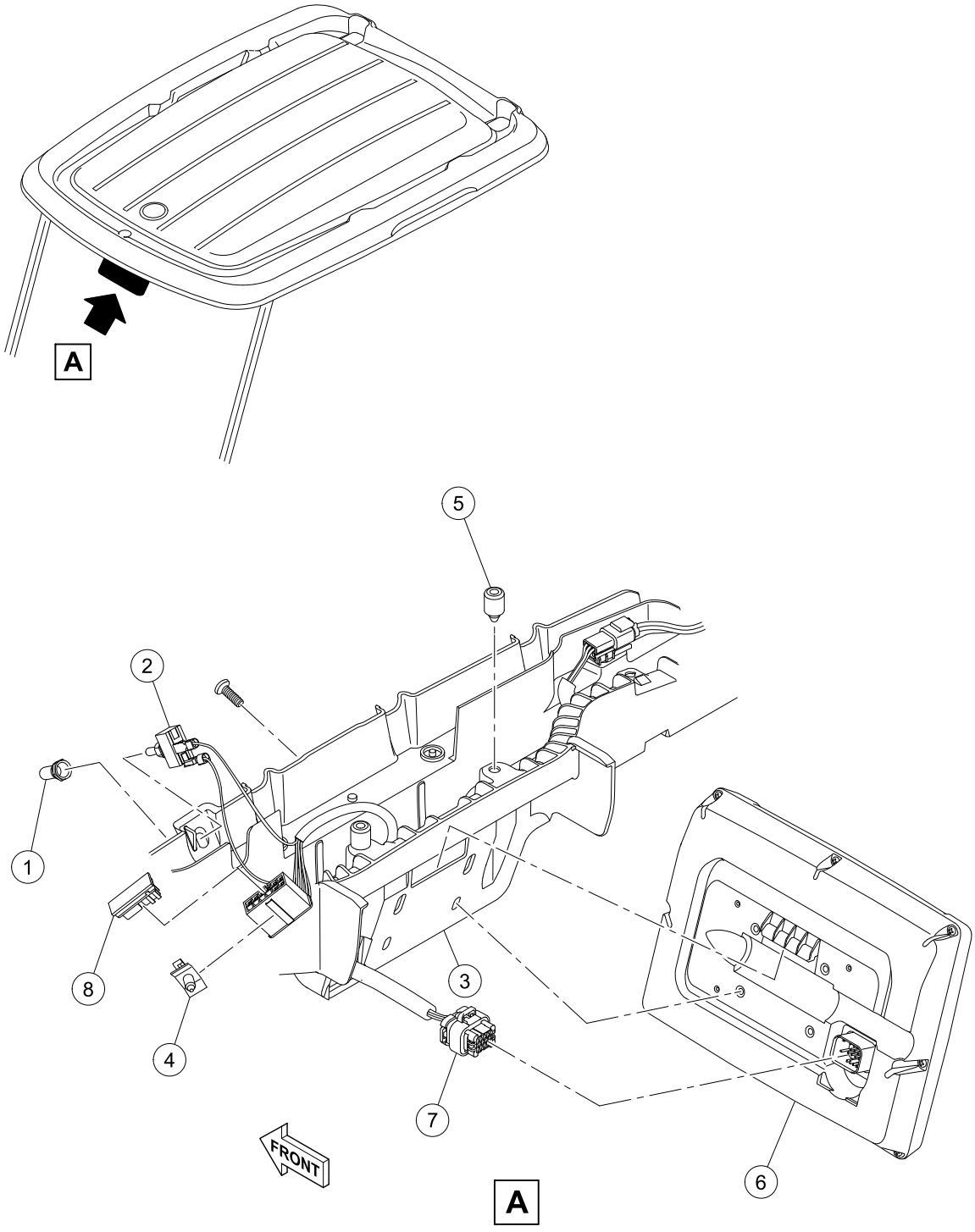

G-150199-000001

ITEM	PART NO.	DESCRIPTION	QTY
		1 2 3 4	
1	101908401	Boot, Switch	1
2	102511101	Switch, Tow	1
3	47559265002	Support, Display Unit, Bt	1
4	N/A	Clip, Mount, Conn	1
5	47618108001	Bumper, Rubber, 7mm, S60	2
6	47618861001	Visage, Vdu 3.0, Sx	1
7	47625026001	Harn, Vdu-aud, Console, Li-a/c	1
8	47631293001	Conn, Harness, Cap, Can, Ac	1

4

E

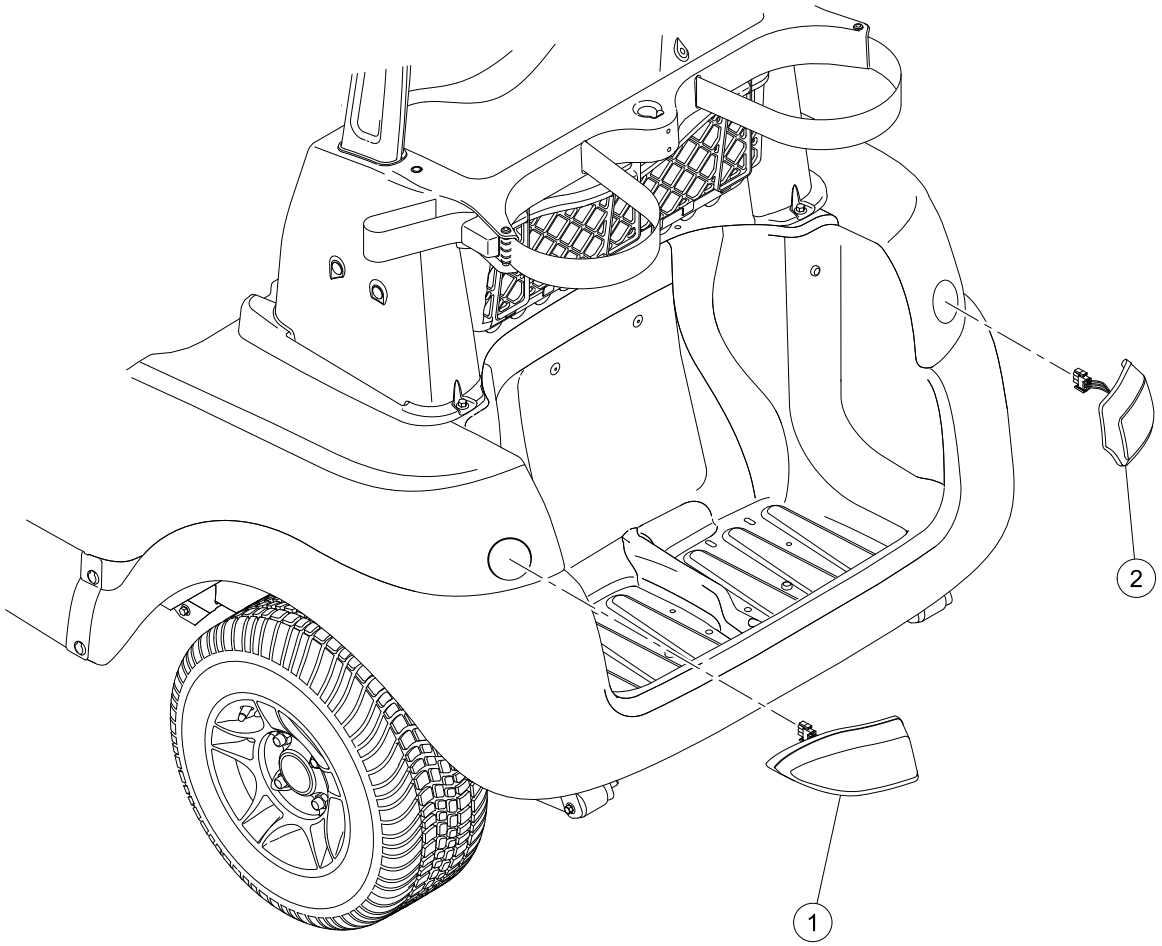

G-130699-000002

ITEM	PART NO.	DESCRIPTION	QTY
		1 2 3 4	
1	47643352001	Assembly, Taillight, LH	1
2	47643352002	Assembly, Taillight, RH	1

4

E

BRAKES AND PEDAL GROUP ASSEMBLIES

5

E

5

E

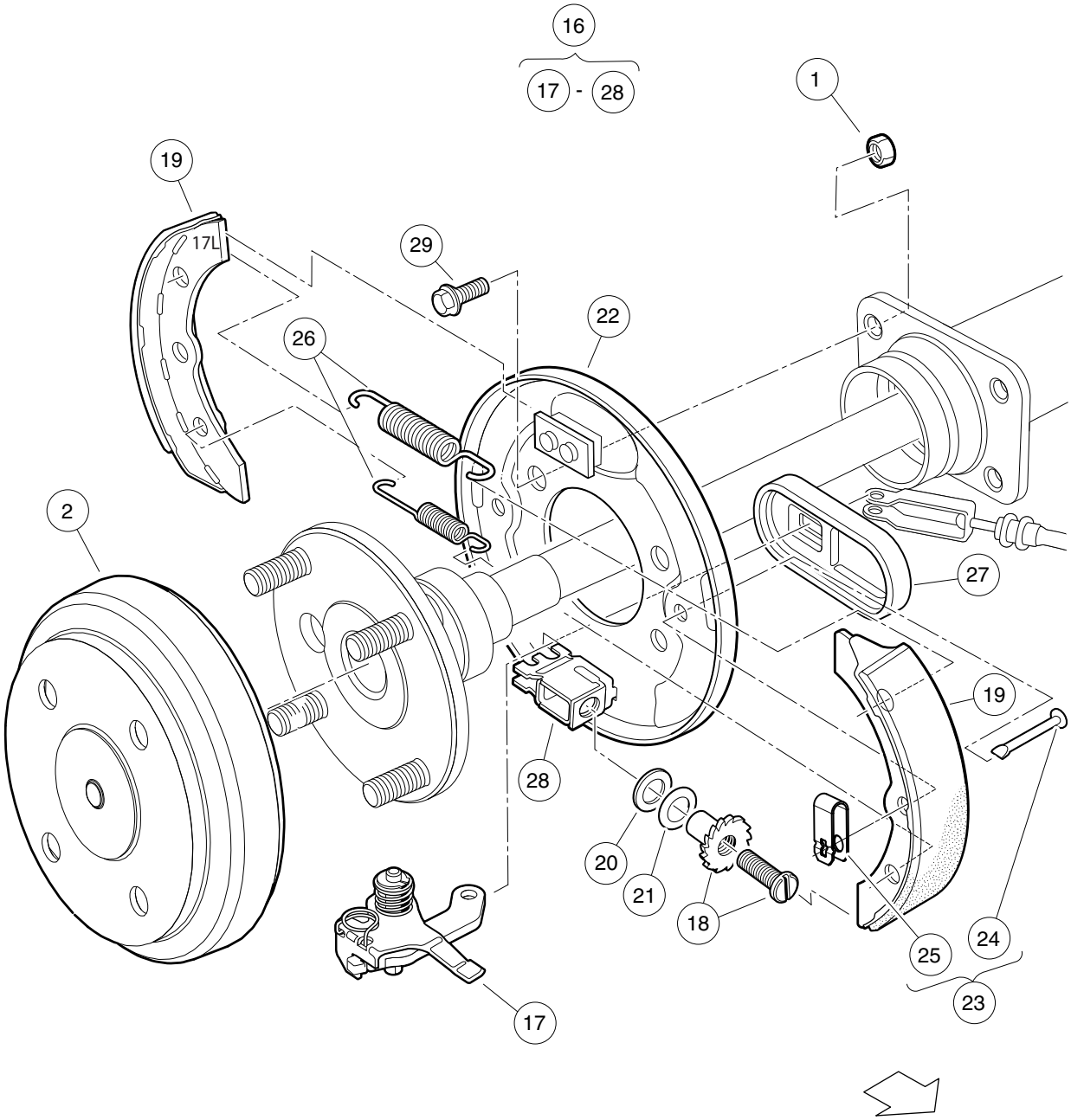

000186-006

REAR BRAKES, SELF-ADJUSTING

ITEM	PART NO.	DESCRIPTION	QTY
		1 2 3 4	
1	1013924	Nut, 5/16-24, Hex Head Cone	8
2	101791101	Drum without Center Hole, Brake	2
3	103380201	Asm, Brake Cluster, Mech, Drvr (includes items 4 through 15)	1
4	101815502	Lever Assembly, Self-Adjusting Brake, Left	1
5	101816502	Adjusting Mechanism, Self-Adjusting Brake, Left	1
6	101823201	Package, Brake Shoe, Self-Adjusting	1
7	101823801	Plate, Washer, Brake, Self-Adjusting	1
8	101823901	Washer, Brake, Self-Adjusting	1
9	103483102	Backing Plate, Driver-side	1
10	103483201	Kit, Shoe Retainer (includes items 11 and 12)	1
11	N/A	Pin	2
12	N/A	Spring, Shoe, Clamp	2
13	103483401	Package Brake Spring Self Adj	1
14	103483601	Cover, Dust	1
15	103483701	Brake Block	1
16	103380202	Asm, Brake Cluster, Mech, Pass (includes items 17 through 28)	1
17	101815501	Lever Assembly, Self-Adjusting Brake, Right (Passenger)	1
18	101816501	Adj Mechanism, S.A. Brakes, Right (Passenger)	1
19	101823201	Package, Brake Shoe, Self-Adjusting	1
20	101823801	Plate, Washer, Brake, Self-Adjusting	1
21	101823901	Washer, Brake, Self-Adjusting	1
22	103483101	Backing Plate, Passenger-side	1
23	103483201	Kit, Shoe Retainer (includes items 24 and 25)	1
24	N/A	Pin	2
25	N/A	Spring, Shoe, Clamp	2
26	103483401	Package Brake Spring Self Adj	1
27	103483601	Cover, Dust	1
28	103483701	Brake Block	1
29	47542195001	Bolt, Brake Cluster Mnt	8

Note: Driver-side brake cluster not shown. Components have a similar appearance to passenger-side brake cluster components.

5

E

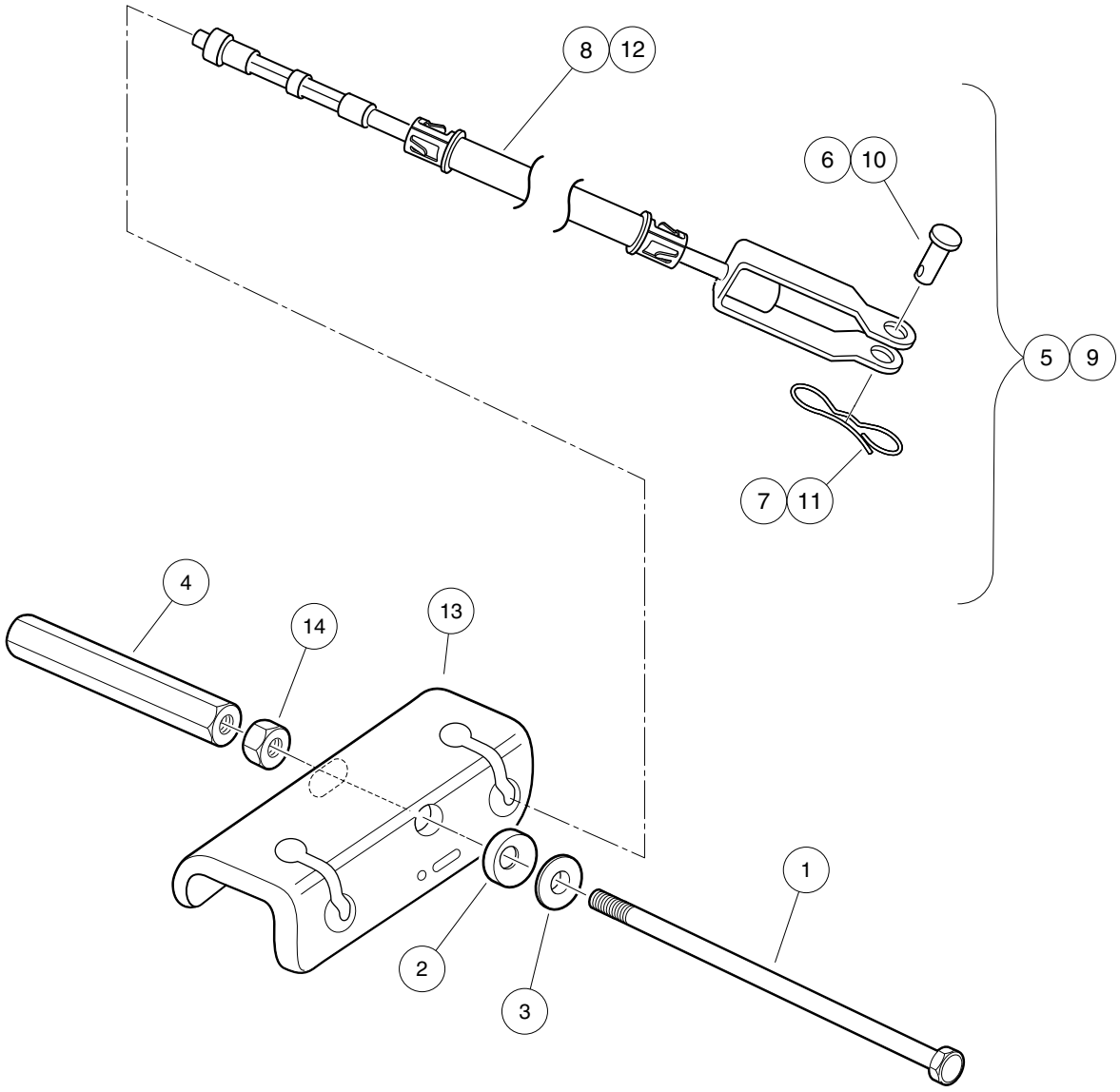

000467-006

BRAKE CABLES AND EQUALIZER BRACKET

ITEM	PART NO.	DESCRIPTION	QTY
		1 2 3 4	
1	102297901	Bolt, 5/16-18 X 7.375, Hex	1
2	102551901	Washer, 5/16, Self Comp, Cup	1
3	102552001	Washer, 5/16, Self Comp, Cone	1
4	102594301	Nut, 5/16-18, Hex Adjusting -l	1
5	103528701	Kit, Brake Cable, Passenger-side (includes items 6 through 8)	1
6	1010829	Pin, Clevis, 5/16 X 3/4	1
7	102292801	Pin, Bow Tie Locking - .072	1
8	N/A	Cable, Brake, Right	1
9	103528702	Kit, Brake Cable, Driver-side (includes items 10 through 12)	1
10	1010829	Pin, Clevis, 5/16 X 3/4	1
11	102292801	Pin, Bow Tie Locking - .072	1
12	N/A	Cable, Brake, Left	1
13	103535001	Bracket, Equalizer	1
14	1242	Nut, 5/16-18 Hex	1

5

E

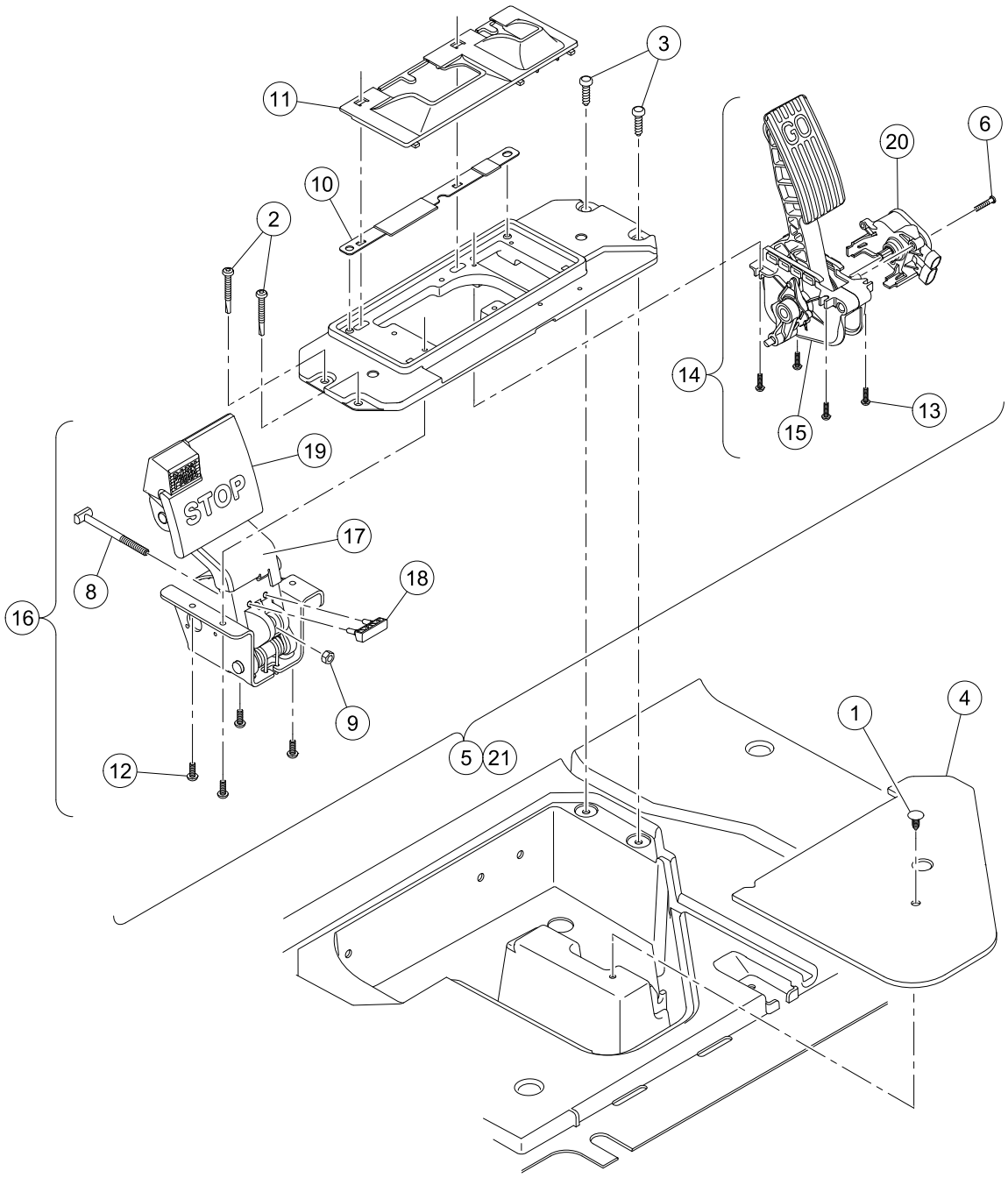

G-131101-000001

PEDAL GROUPS WITH MCOR

ITEM	PART NO.	DESCRIPTION	QTY
		1 2 3 4	
1	1010434	Barrel - Plastic	1
2	102292201	Screw-1/4-20x2.20 Tx Pn Hd Sd	2
3	102298030	Screw, K80x30, Torx Pn Hd Pt	2
4	102500801	Plate - Floor Cover	1
5	103874111	Asm, Pedal Set, No Switch, w/MCOR, Service (includes items 6 through 20)	1
6	103943401	Screw, Pan, #10 X 1.00 Hi-lo	1
7	103975011	Asm, Pedal Set, No Switch, Service (includes items 8 through 16)	1
8	102559401	Rod, Brake	1
9	102559701	Nut, Brake Rod	1
10	102594801	Shield, Debris Aux	1
11	102594901	Shield, Debris Primary	1
12	102595901	Screw, M6x1.0x17 Ph, Taptite	4
13	102596001	Screw, M5x0.8x18 Ph, Taptite	4
14	102596301	Pedal, Accelerator, Anodized (includes item 15)	1
15	103777601	Asm, Park Brake Release, Anodized	1
16	103974901	Asm, Brake Pedal, Anodized (includes items 17 through 19)	1
17	102595201	Cover, Brake	1
18	102595301	Upstop, Brake	1
19	102595401	Pad, Brake	1
20	105116301	MCOR4, Type 16 Switch	1
21	103874112	Pedal Assy Mcor3 W/switch Sp	1
22	103975012	Pedal Set, Mech, Anod W/sw Sp	1

Note: Item 7 and 22 are not illustrated. All detail parts for the Pedal Sets are identical. Reference the Electrical Section for detailed MCOR information.

5

E

STEERING, FRONT AND REAR SUSPENSION

6

E

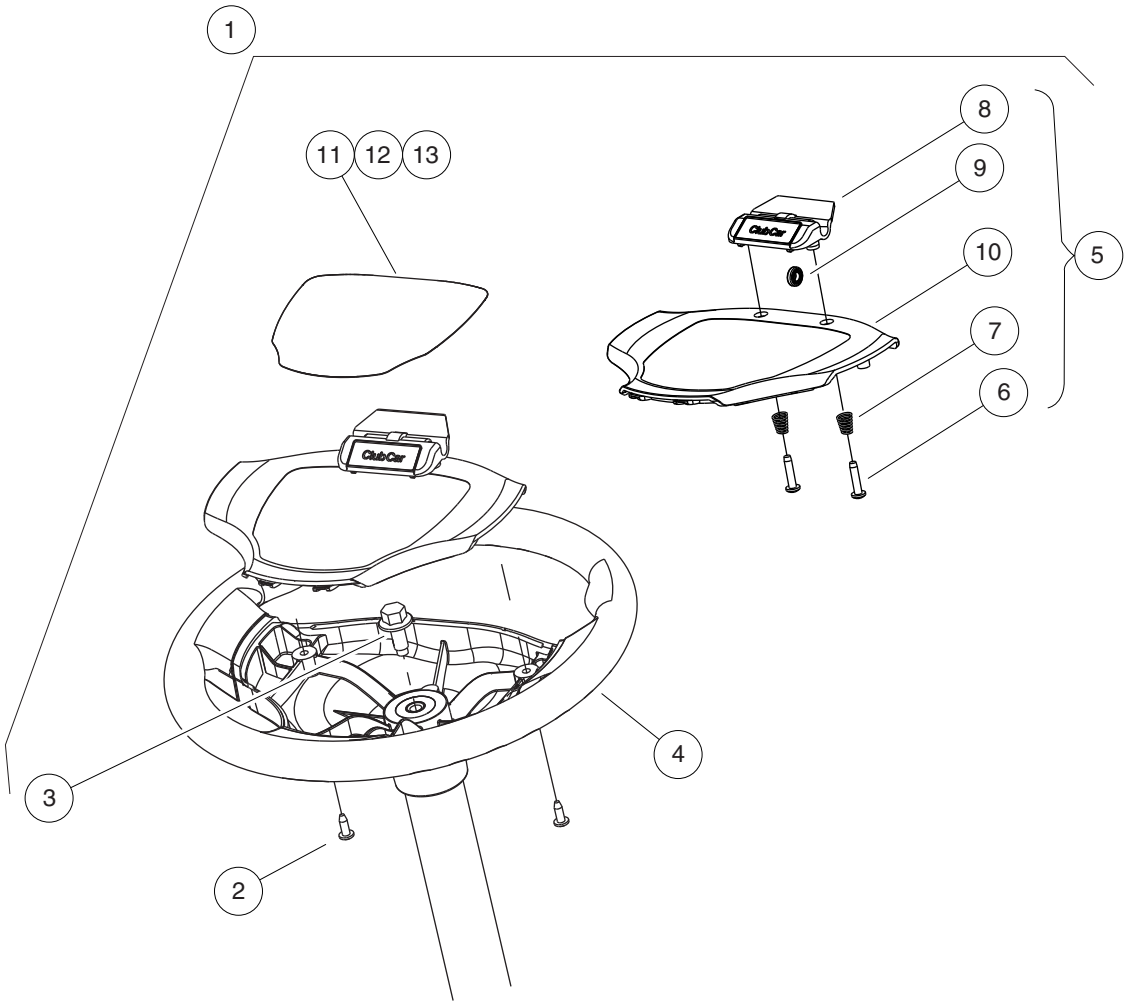

000470-002

STEERING WHEEL, COMFORT GRIP WITH CLIP

ITEM	PART NO.	DESCRIPTION	QTY
		1 2 3 4	
1	103796701	Kit, Hex, Steering Wheel (includes items 2 through 13)	1
2	101850301	Screw, #12-16 X 0.50 Washer-Head Hi-Lo	2
3	102290120	Bolt, M10 X 20 Hex Washer Hd	1
4	103724503	Steering Wheel, Soft Grip, Hex	1
5	103724901	Asm, Scorecard, Clip (includes items 6 through 10)	1
6	1012565	Screw, #12 Phillips Round Head	2
7	1012566	Tapered Compression Spring	2
8	1016154	Clip, Scorecard	1
9	1016214	Pencil Grip	1
10	103724601	Cover, Steering Wheel, Clip	1
11	103783001	Decal, Op Instr, Ele	1
12	103783002	Decal, Op Instr, Gas Ps	1
13	103783003	Decal, Op Instr, Gas Ks	1

Note: Kit supplies three optional decals. Refer to the Operators Manual for this vehicle or the decal section of this Manual to determine which decal applies.

6

E

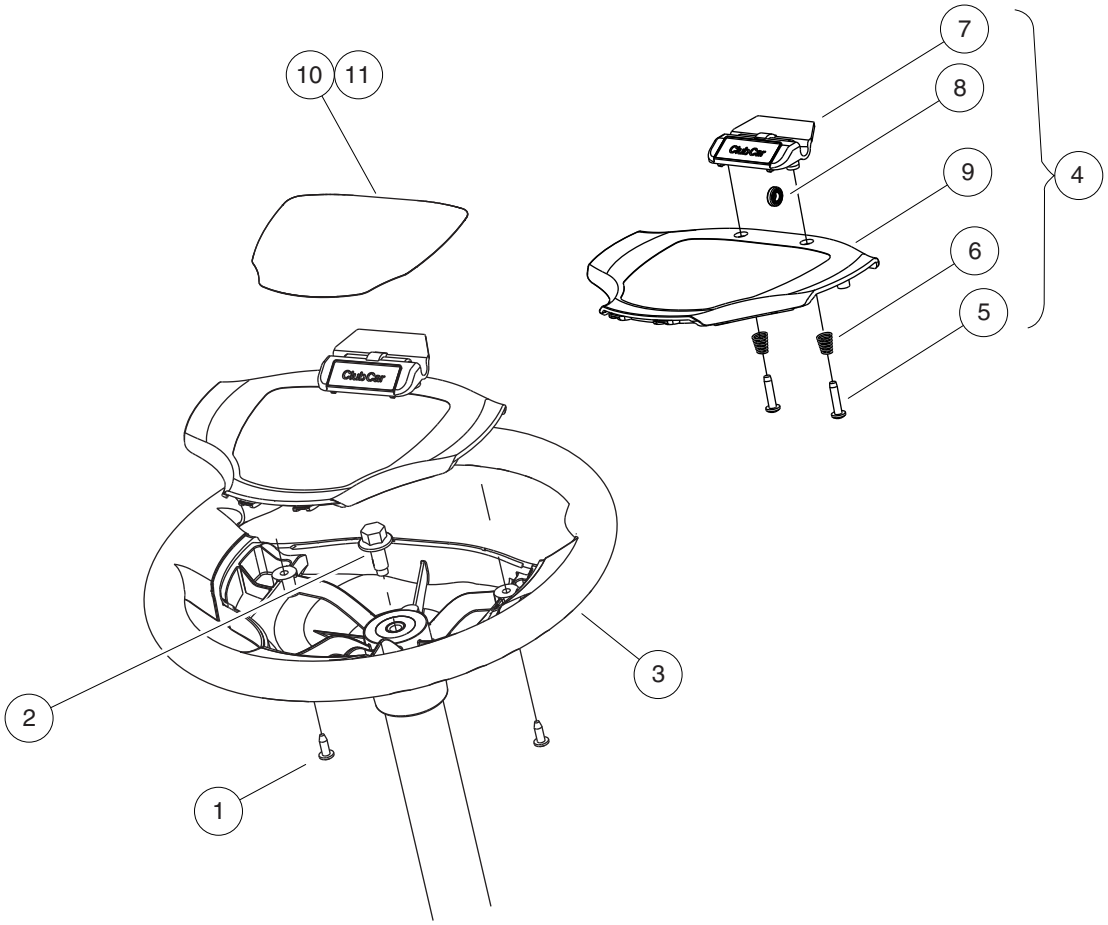

000470-005

STEERING WHEEL

ITEM	PART NO.	DESCRIPTION	QTY
		1 2 3 4	
1	101850301	Screw, #12-16 X 0.50 Washer-Head Hi-Lo	2
2	102290120	Bolt, M10 X 20 Hex Washer Hd	1
3	103724501	Steering Wheel, Hex	1
4	103724901	Asm, Scorecard, Clip (includes items 5 through 9)	1
5	1012565	Screw, #12 Phillips Round Head	2
6	1012566	Tapered Compression Spring	2
7	1016154	Clip, Scorecard	1
8	1016214	Pencil Grip	1
9	103724601	Cover, Steering Wheel, Clip	1
10	103783001	Decal, Op Instr, Ele	1
11	103783002	Decal, Op Instr, Gas Ps	1
		Note: Refer to the Operators Manual for this vehicle or the decal section of this Manual to determine which decal applies.	

6

E

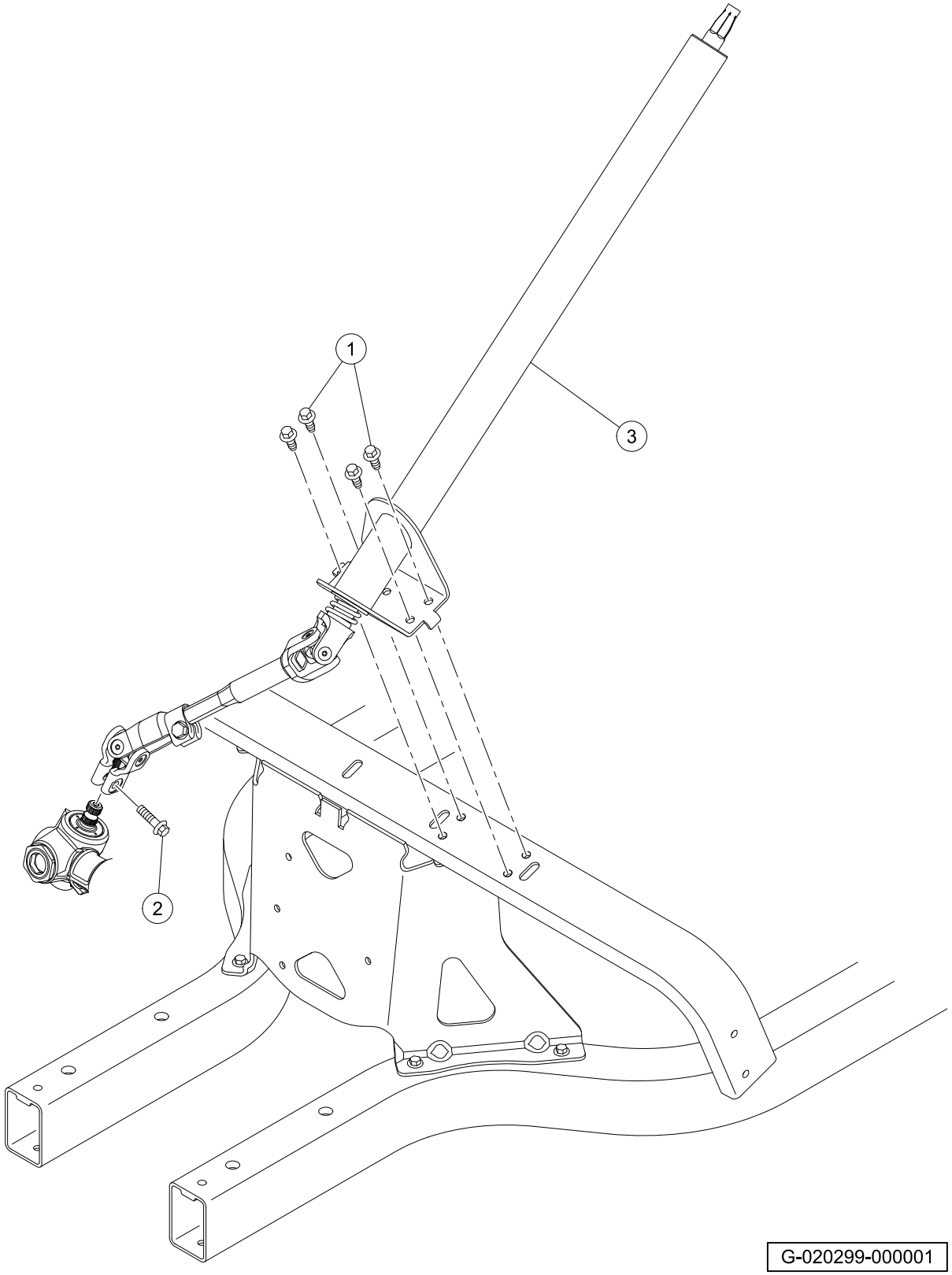

ITEM	PART NO.	DESCRIPTION	QTY
		1 2 3 4	
1	102298116	Bolt, Flanged Head, M8 X 16.0	4
2	102298130	Bolt, Flange Head, M8 X 30.0	1
3	105049001	Kit, Inner Steering Clmn	1

6

E

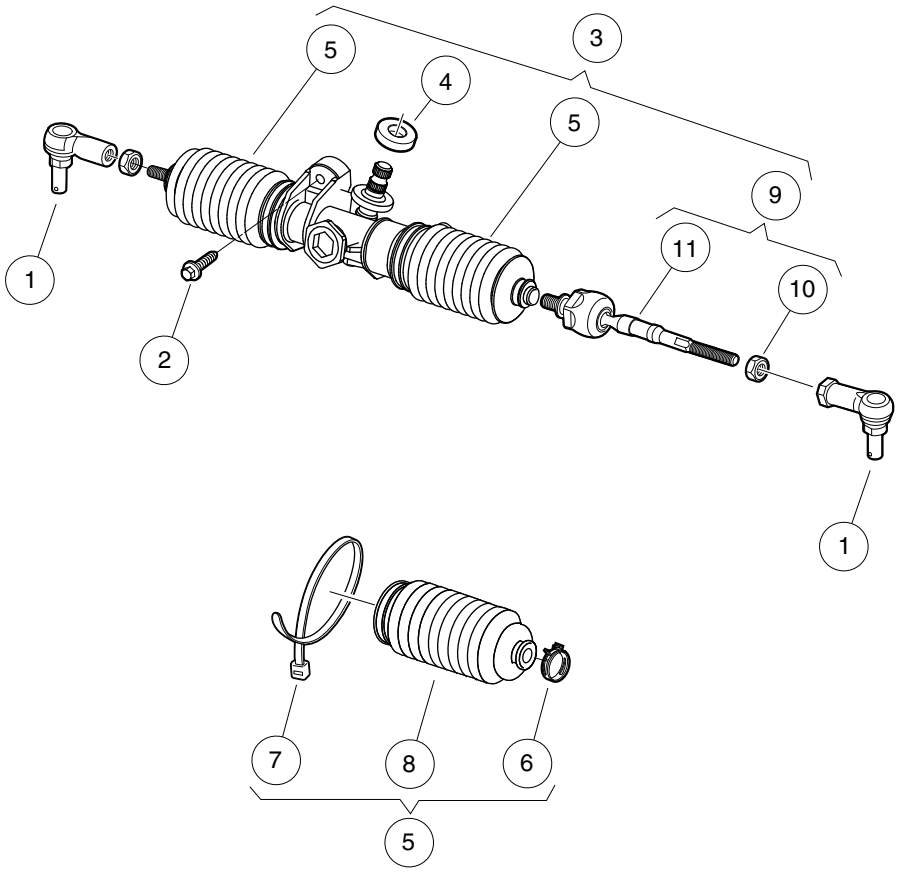

000476-005

STEERING GEAR ASSEMBLY

ITEM	PART NO.	DESCRIPTION	QTY
		1 2 3 4	
1	102022601	End, Tie Rod M12 X 1.25 Rh	2
2	102289001	Screw, M8X1.25X30, Hex	3
3	103679701	Asm, Rack & Pinion (includes items 4 through 9)	1
4	102565201	Seal, Dust, Steering Pinion	1
5	103826201	Bellow Kit, Steering-sona (includes items 6 through 8)	2
6	102566001	Clip, Steering	1
7	8990	Tie Wrap, 8" Nylon	1
8	N/A	Bellows	1
9	103826301	Kit, IBJ (Inner Ball Joint), Steering-sona (includes items 10 and 11)	2
10	1013042	Nut, 12mm Hex	1
11	N/A	Inner Ball Joint	1

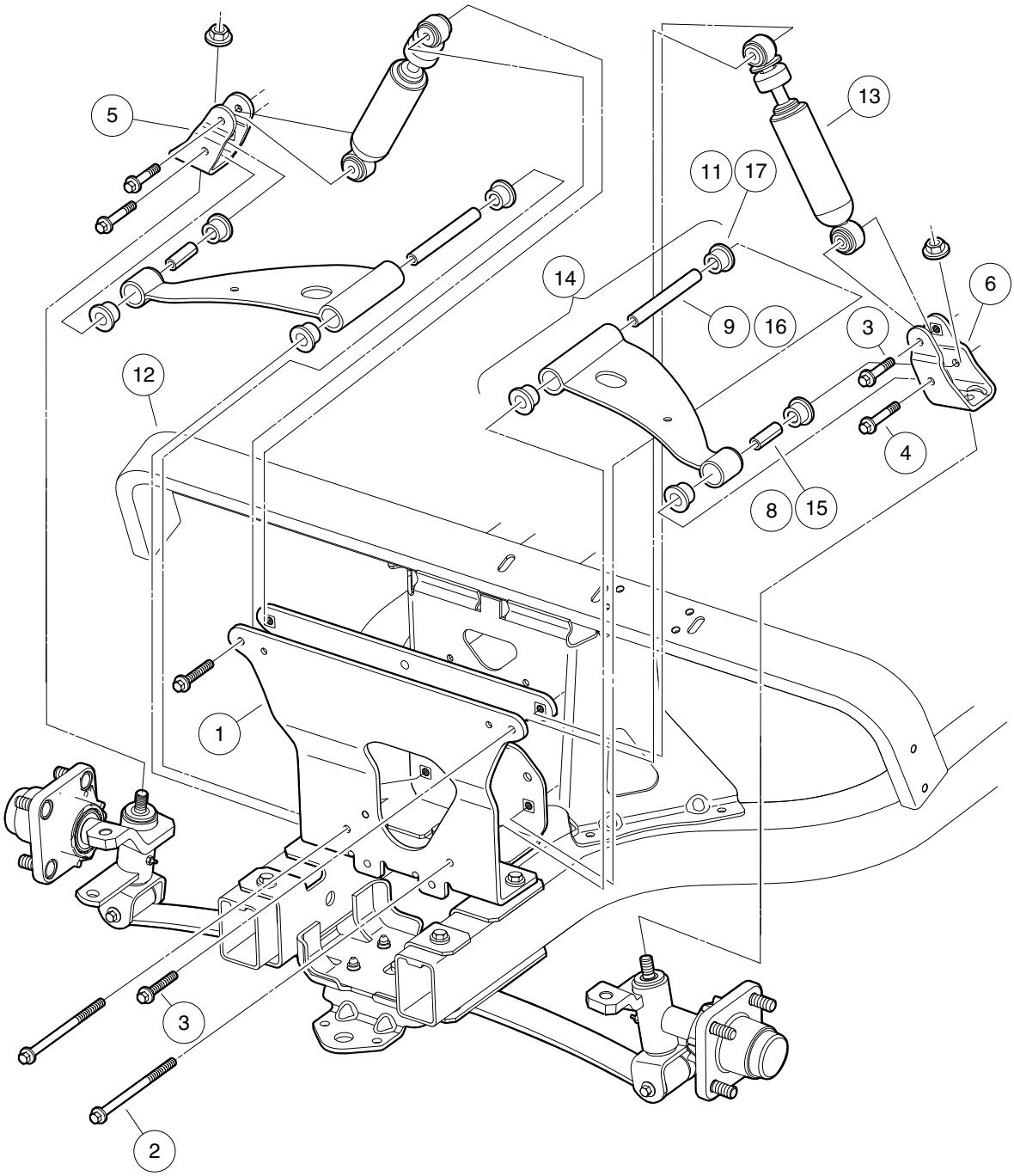

000445-005

FRONT SUSPENSION, UPPER

ITEM	PART NO.	DESCRIPTION	QTY
		1 2 3 4	
1	102287101	Assembly - Front Structure	1
2	102288901	Bolt, Hex, M8x1.25 X 135	2
3	102289401	Screw- Hex Cap, M8 X 1.25 X 45	4
4	102289501	Screw- Hex Cap, M8 X 1.25 X 70	2
5	102289601	Upper Clevis Assembly, Passenger-side	1
6	102289701	Upper Clevis Assembly, Driver-side	1
7	102289901	Kit, Susp, Bushing Joints (includes items 8 through 11)	1
8	102287601	Sleeve - Rolled, Outer	2
9	102287701	Sleeve - Rolled, Inner	2
10	102288101	Sleeve - Rolled, Spring	2
11	102956201	Bushing, Urethane, Short	12
12	102505701	Assembly, Dash Support	1
13	102588601	Shock Absorber Front	2
14	103388501	Asm, 3 Piece A-arm, Bushings (includes items 15 through 17)	2
15	102287601	Sleeve - Rolled, Outer	1
16	102287701	Sleeve - Rolled, Inner	1
17	102956201	Bushing, Urethane, Short	4

Note: Item 7 (not shown) includes bushings and sleeves for control arms and front suspension leaf spring. See lower suspension page for illustration of item 10 (not shown).

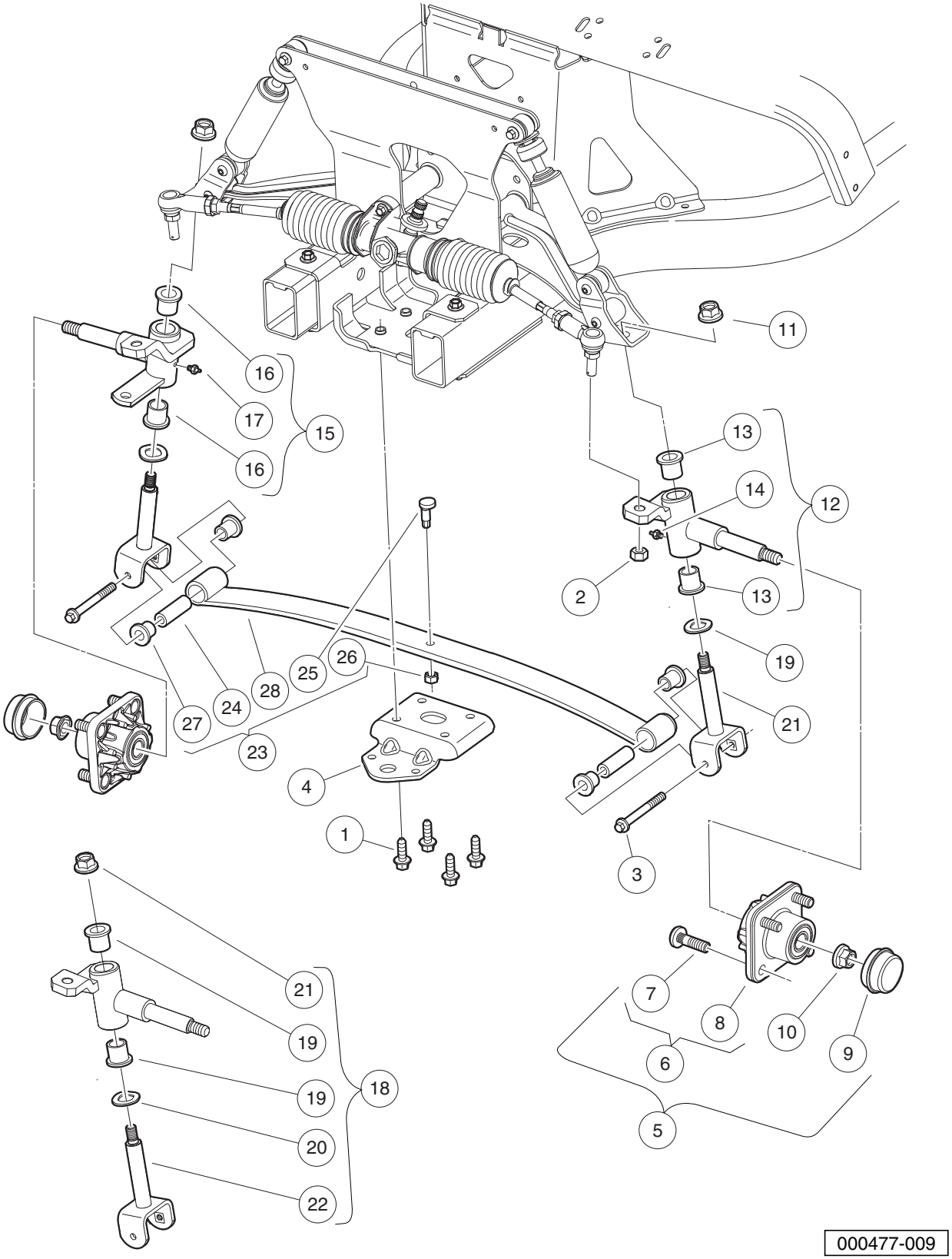
16
17
15
16
11
13
14
12
2
13
19
21
25
26
28
24
27
23
4
1
3
21
19
19
20
22
18
7
8
10
9
6
5
000477-009

FRONT SUSPENSION, LOWER

ITEM	PART NO.	DESCRIPTION	QTY
		1 2 3 4	
1	102289101	Screw-m10x1.5, Trilob, Hex Fl	4
2	102289201	Nut - Hex Locking, M12 X 1.25	2
3	102289501	Screw- Hex Cap, M8 X 1.25 X 70	2
4	102289801	Clamp - Leaf Spring	1
5	102357701	Replacement Kit, Front Hub (includes items 6 through 10)	1
6	N/A	Front Hub Assembly, Ball Bearing (includes items 7 and 8)	1
7	102353401	Lug Stud, 1/2-20 UNF, 4037 Stl	4
8	N/A	Hub, Front	1
9	102353201	Cap, Front Hub	1
10	102353301	Hex Nut, Locking Flange, M14x2	1
11	102878201	Nut, Lock,m12,washer,conical	2
12	103638701	Asm, Spindle, with Bushings, Driver-side (includes items 13 and 14)	1
13	102288201	Bushing - Flanged	2
14	N/A	Fitting, Grease, Knuckle Spindle Asym	1
15	103638702	Asm, Spindle, with Bushings, Passenger-side (includes items 16 and 17)	1
16	102288201	Bushing - Flanged	2
17	N/A	Fitting, Grease, Knuckle Spindle Asym	1
18	103638801	Kit, King Pin Joints (includes items 19 through 22)	1
19	102288201	Bushing - Flanged	4
20	102288401	Wave Washer - Kingpin	2
21	102878201	Nut, Lock,m12,washer,conical	2
22	103638601	Asm, King Pin, M12	2
23	103935601	Asm, Spring, Leaf, Front, 50.4 (includes items 24 through 28)	1
24	102288101	Sleeve - Rolled, Spring	2
25	102288701	Eccentric Bolt	1
26	102288801	Nut-hex, 3/8-16	1
27	102956201	Bushing, Urethane, Short	2
28	105187901	Spring, Leaf, Front, 50.4	1

6

E

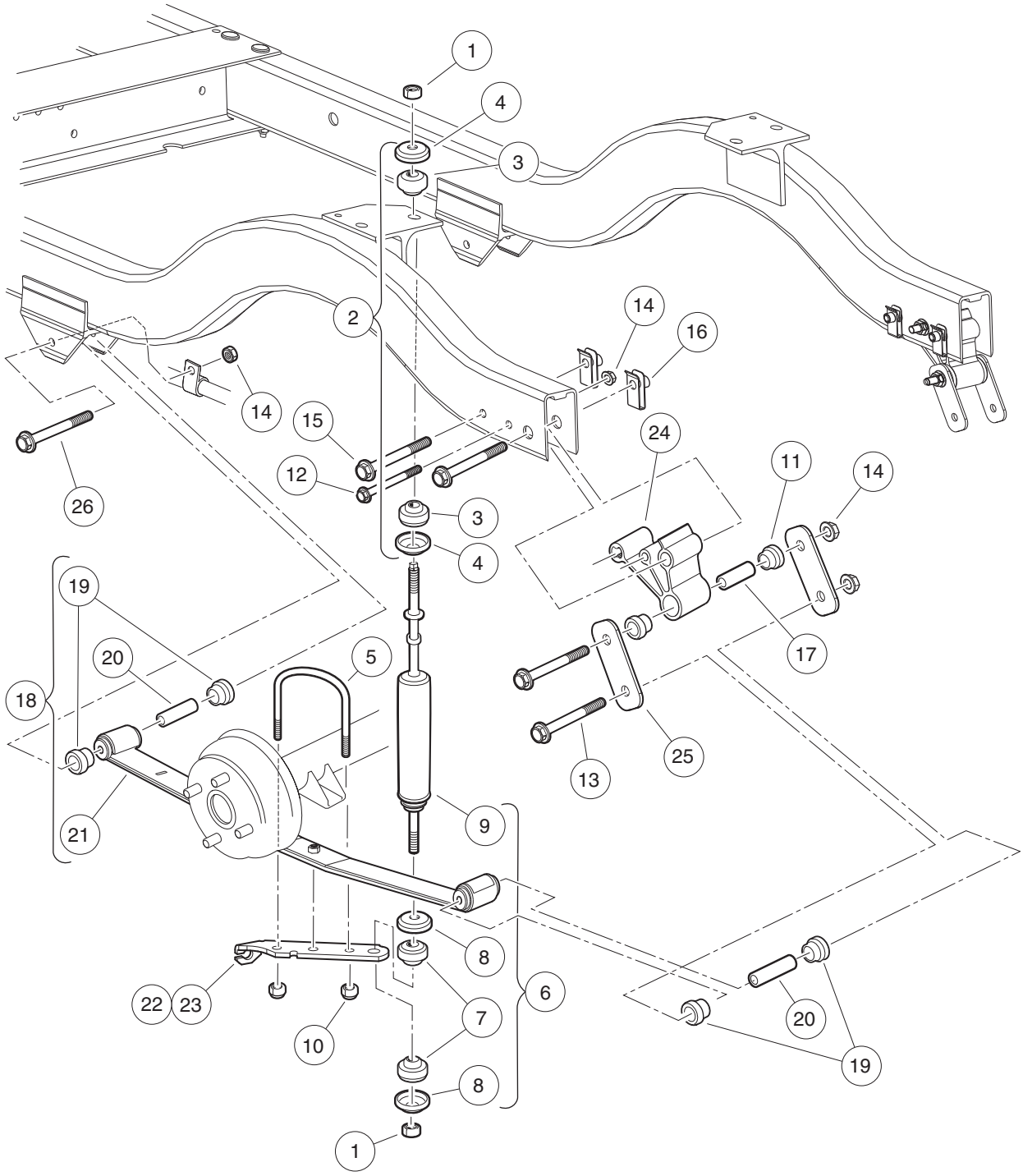

000446-005

REAR SUSPENSION, STANDARD TWO-PASSENGER

ITEM	PART NO.	DESCRIPTION	QTY
		1 2 3 4	
1	1010145	Nut, 3/8-24 Hex	4
2	1011415	Kit, Shock Absorber Cushion (includes items 3 and 4)	2
3	N/A	Retainer, Shock Absorber Cushion	2
4	47579096001	Isolator, Shock Damper	2
5	1012180	U-Bolt	2
6	1013164	Shock Absorber Kit (includes items 7 through 9)	1
7	N/A	Cushion, Shock Absorber	8
8	N/A	Retainer, Shock Absorber Cushion	8
9	102588501	Shock Absorber, Rear	2
10	1014555	Locknut, 7/16-14 Nylon Hex	4
11	1015583	Bushing, Urethane	4
12	102298170	Bolt - Flange Hd, M8 X 70.0	2
13	102298175	Bolt - Flange Hd, M8 X 75.0	2
14	102298401	Nut,m8,all Metal Lock	8
15	102298580	M8-1.25 X 80 Sems	4
16	102298601	J-clip - M8 X 1.25	4
17	102506401	Sleeve - Spring Eye Mounts	2
18	103742305	Asm, Rear Leaf Spring, Light (includes items 19 through 21)	2
19	101558302	Bushing, Urethane, Soft	4
20	102506401	Sleeve - Spring Eye Mounts	2
21	N/A	Leaf Spring, Rear, Light	1
22	103921601	Bracket, Shock Mounting, Drv	1
23	103921602	Bracket, Shock Mounting, Pas	1
24	103964901	Spacer, Rail, Shackle	2
25	103965001	Brkt, Shackle, Rear	4
26	105188185	Bolt, M8 X 85mm, 10.9 Grade	4

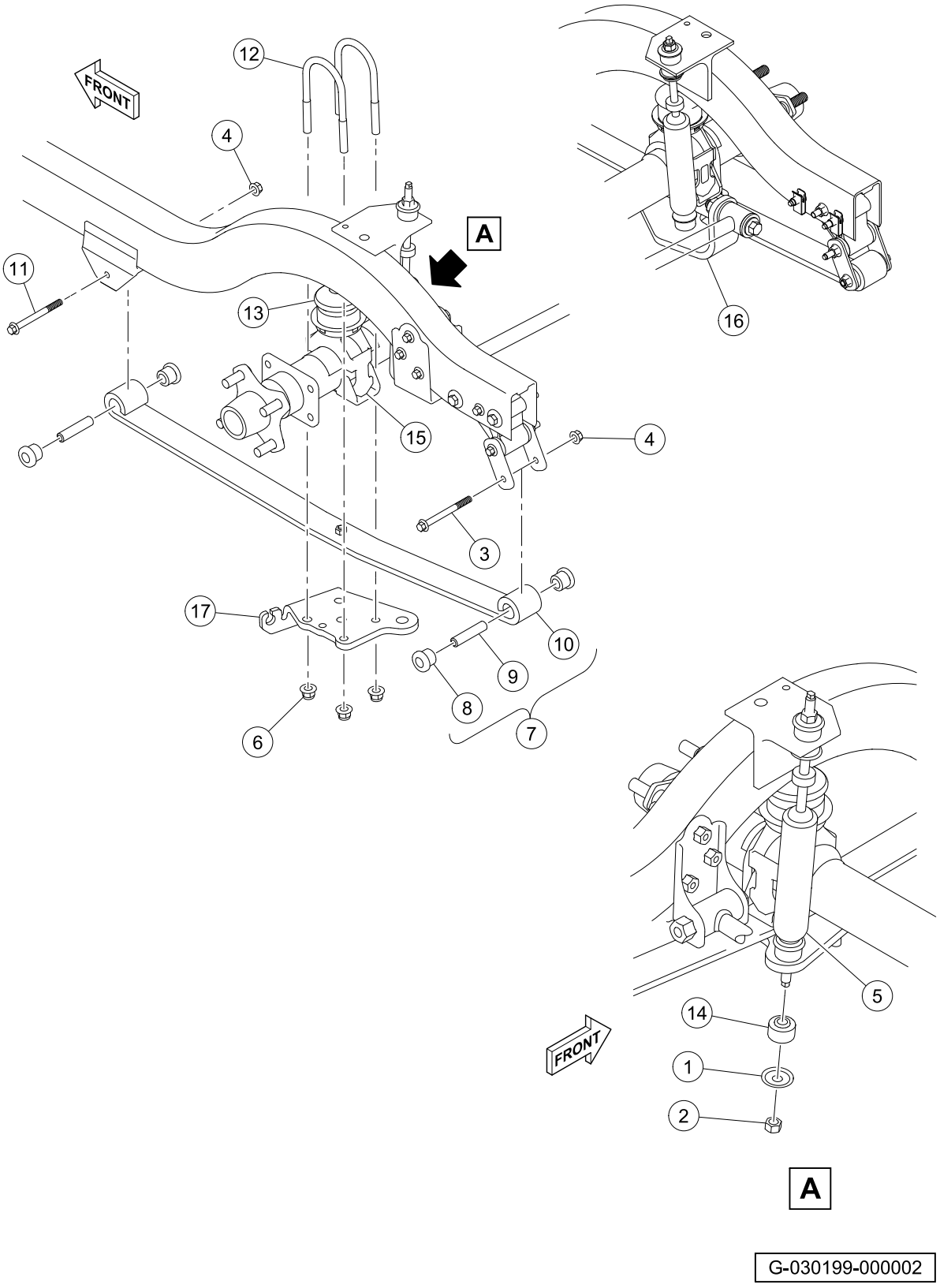

G-030199-000002

REAR SUSPENSION, 4-PASSENGER – CONSUMER

ITEM	PART NO.	DESCRIPTION	QTY
		1 2 3 4	
1	N/A	Retainer, Shock Absorber Cushion	8
2	1010145	Nut, 3/8-24 Hex	4
3	102298175	Bolt - Flange Hd, M8 X 75.0	2
4	102298401	Nut,m8,all Metal Lock	4
5	102588501	Shock Absorber, Rear	2
6	102670701	Nut, Flange, M10 X 1.5 Nylon	8
7	103742304	Asm, Rear Leaf Spring, Std (includes items 8 through 10)	2
8	101558302	Bushing, Urethane, Soft	4
9	102506401	Sleeve - Spring Eye Mounts	2
10	N/A	Leaf Spring, Rear, Std	1
11	105188185	Bolt, M8 X 85mm, 10.9 Grade	2
12	105188701	U-bolt, M10x1.5x58	4
13	47576196001	Bumper, Jounce, D-255828	2
14	47579096001	Isolator, Shock Damper	8
15	47583666001	Bracket, Perch, Bumper, Jounce	2
16	47599907001	Bkt, U-bolt, 3-1, Lh	1
17	47599908001	Bkt, U-bolt, 4-1, Rh	1

6

E

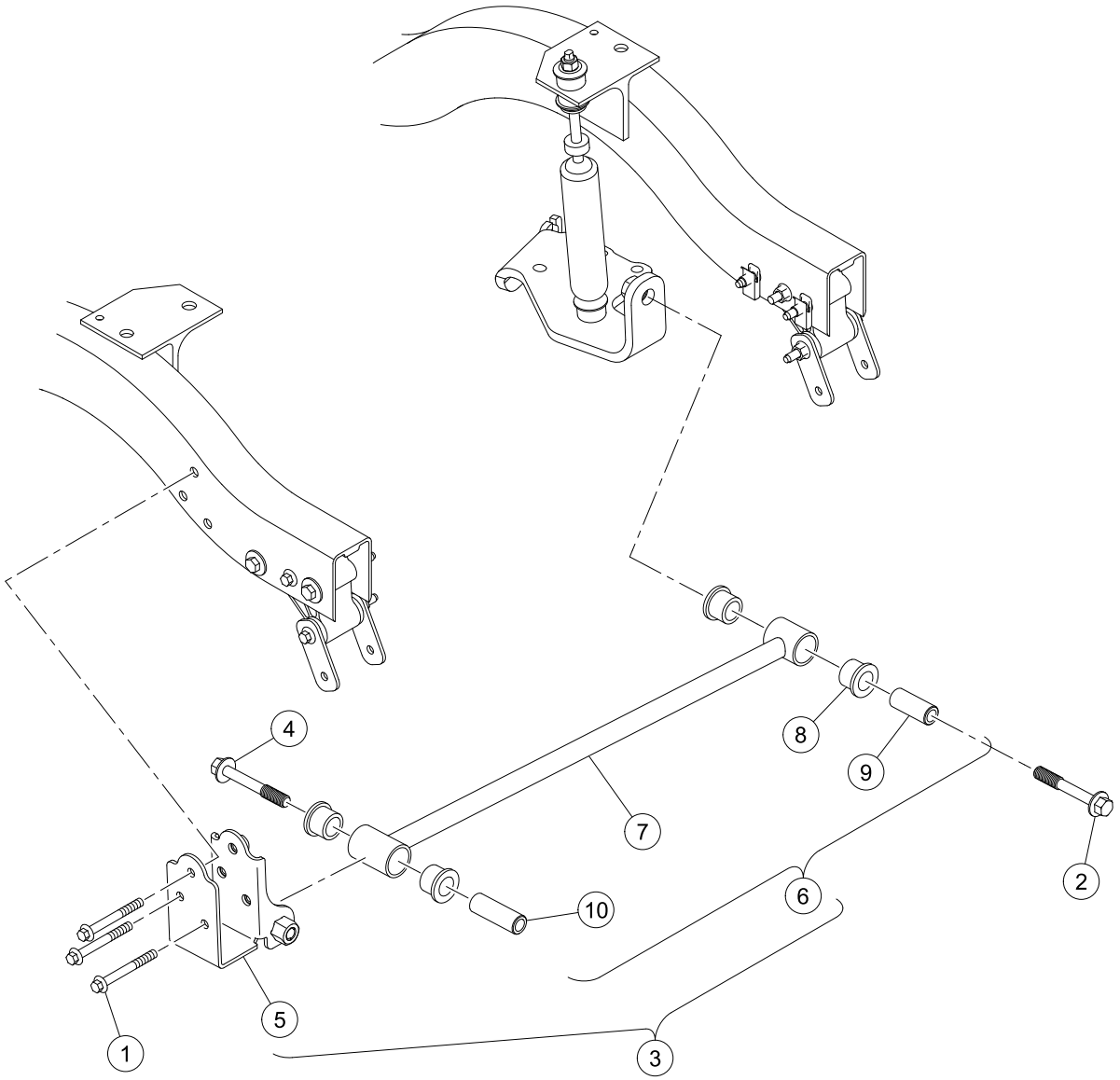

G-030199-000001

PANHARD ROD

ITEM	PART NO.	DESCRIPTION	QTY
		1 2 3 4	
1	102298170	Bolt - Flange Hd, M8 X 70.0	3
2	103146501	Bolt, Flg, M12 X 1.75 X 80	1
3	47577865001	Assy, Panhard and Frame Rail Bracket (includes items 4 through 6)	1
4	103146501	Bolt, Flg, M12 X 1.75 X 80	1
5	47576649001	Bkt, Frame Rail, Panhard	1
6	47577864001	Asm, Rod, Panhard (includes items 7 through 10)	1
7	47576650001	Assy, Weldment, Panhard	1
8	47576651001	Bushing, Slip, 3390000-160802	4
9	47576652001	Sleeve, Bushing, Panhard, Short	1
10	47576652002	Sleeve, Bushing, Panhard, Long	1

6

E

ELECTRICAL SYSTEM – LITHIUM-ION

7

E

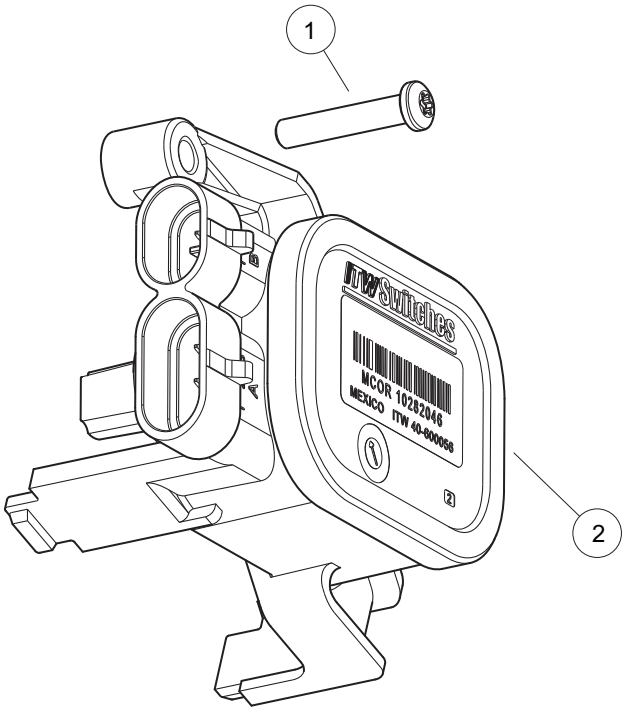

000243-005

MOTOR CONTROLLER OUTPUT REGULATOR (MCOR)

ITEM	PART NO.	DESCRIPTION	QTY
		1 2 3 4	
1	103943401	Screw, Pan, #10 X 1.00 Hi-lo	1
2	105116301	MCOR4, Type 16 Switch	1

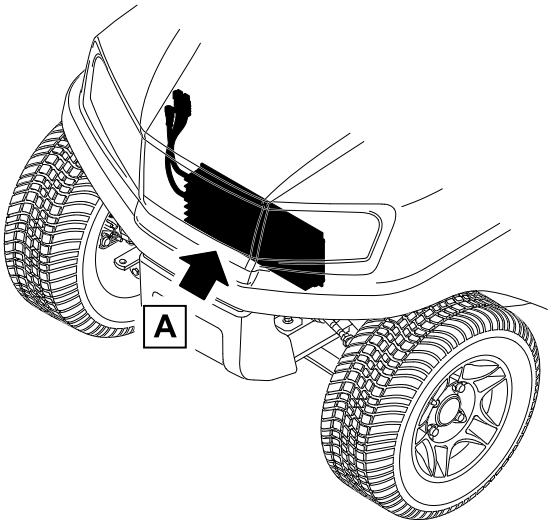

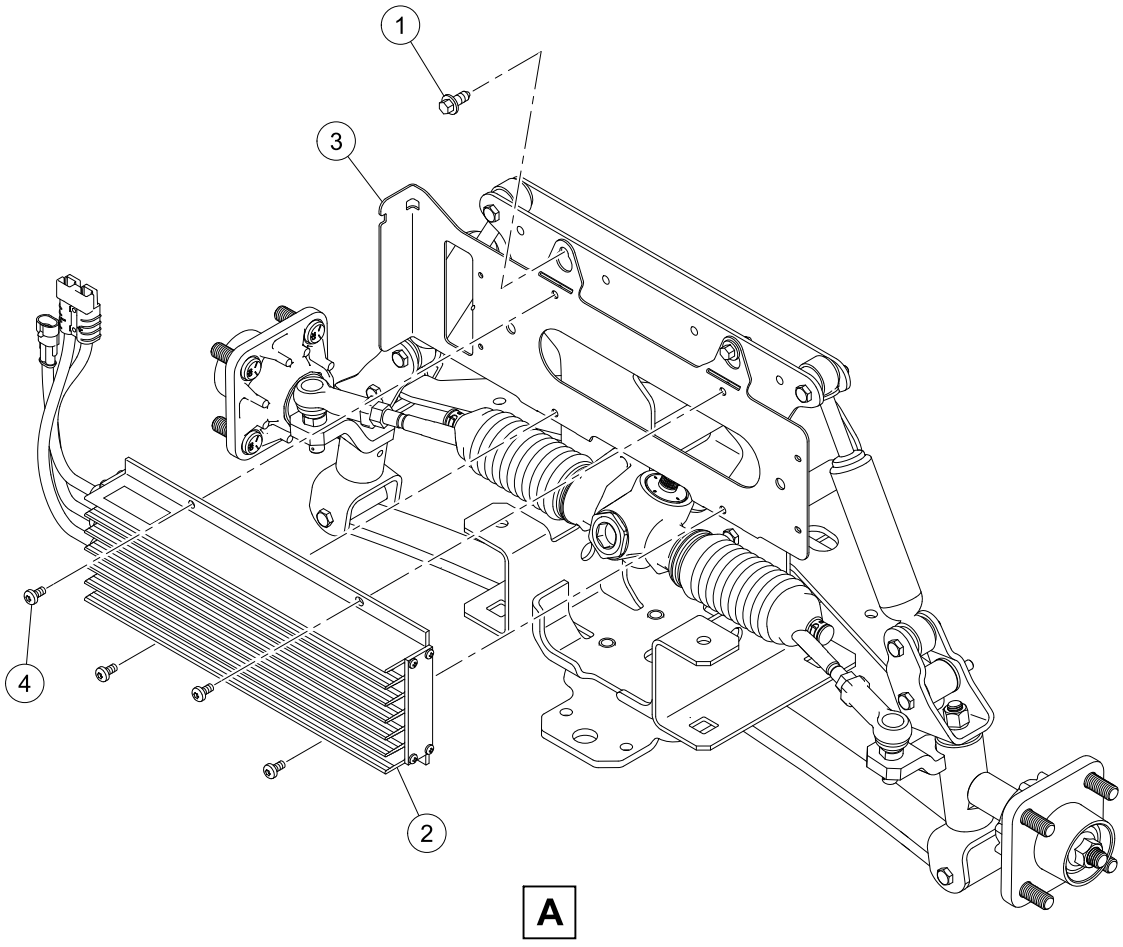

G-130299-000004

DYNAMIC BRAKING RESISTOR

ITEM	PART NO.	DESCRIPTION	QTY
		1 2 3 4	
1	102298720	Screw, M8-1.25x20, Taptite	4
2	47631086001	Resistor, DBR	1
3	47636253001	Bracket, DBR	1
4	47644702001	Screw, M6 X 1.0 X 12, Torx	4

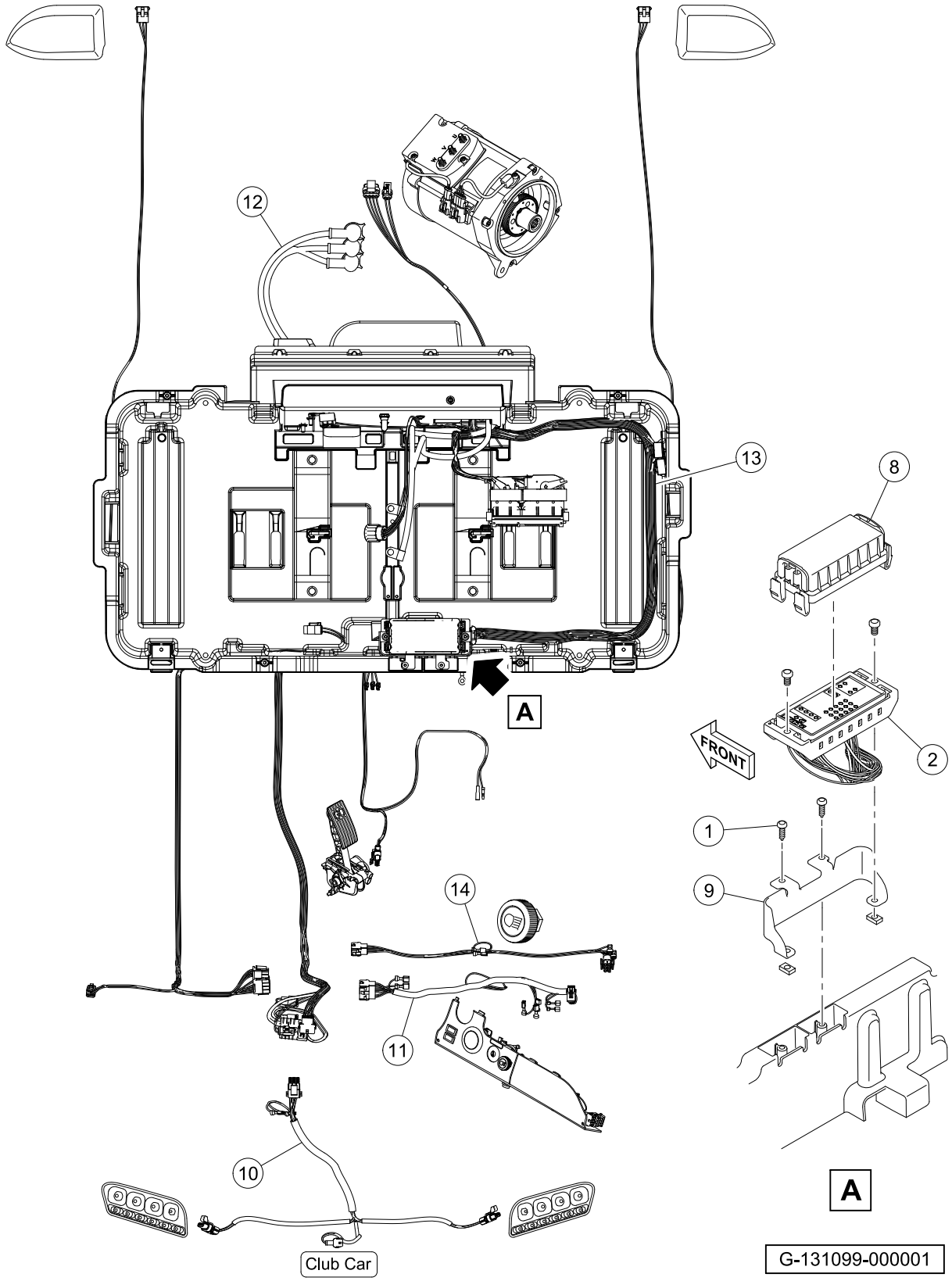
12
13
8
A
FRONT
2
1
9
14
11
10
A
Club Car
G-131099-000001

ITEM	PART NO.	DESCRIPTION	QTY
		1 2 3 4	
1	102296920	Screw, M6, Torx Button Head, Sems	2
2	47605992001	Base, PDM, 84 Way (includes items 3 through 7)	1
3	105114804	Fuse, Mini, Atm, 5 Amp	1
4	105114806	Fuse, Mini, Atm, 10 Amp	1
5	47616158001	Diode, 1.0a, Atm	2
6	47618753001	Diode, 3.0a, Atm	1
7	47619337001	Diode, Key, PDM	3
8	47605993001	Asm, PDM Cover	1
9	47614268001	Bracket, Fuse Block	1
10	47614742001	Harness, Lighting, Frt, Lio	1
11	47614743001	Harness, Ip, Lio, Prec, El	1
12	47614744001	Harness, Motor, Ac, Lio	1
13	47614750001	Proto_harness, Main, Ac, Lio	1
14	47614807001	Harness, Lgt, Cntrl, Lio, Prec	1

Note: Item 2 is part of the main harness assembly and is not procurable. Items 3 through 7 are contained in item 2 and are not illustrated.

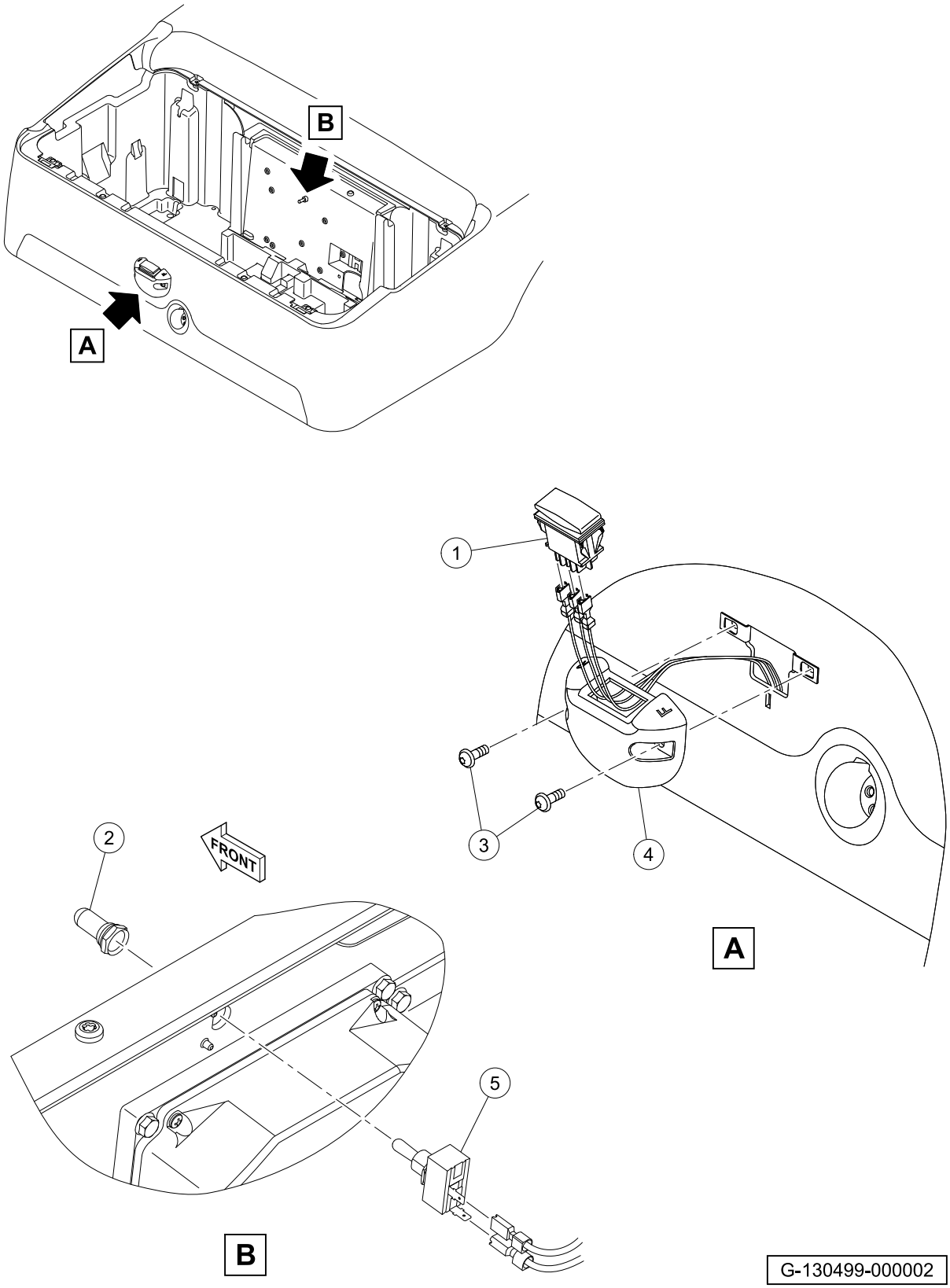
B
A
1
2
FRONT
3
4
A
5
B
G-130499-000002

FORWARD/REVERSE SWITCH AND TOW/RUN SWITCH

ITEM	PART NO.	DESCRIPTION	QTY
		1 2 3 4	
1	101856002	Switch, Rocker, Single-Pole	1
2	101908401	Boot, Switch	1
3	102296920	Screw, M6, Torx Button Head, Sems	2
4	102508401	Housing, FNR Electric	1
5	102511101	Switch, Tow/Run	1

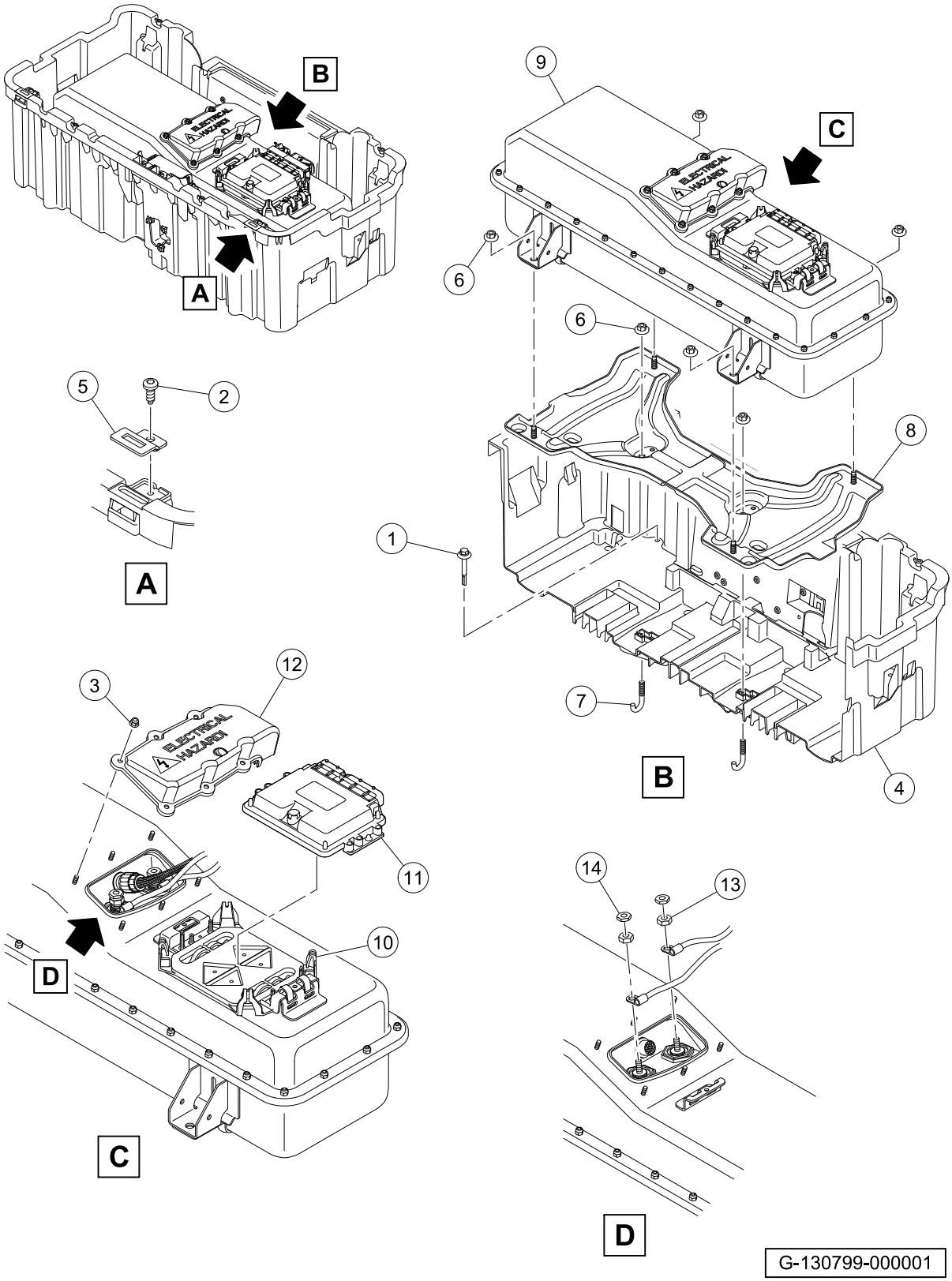
B
A
9
C
6
6
8
1
7
4
B
5
2
A
3
12
11
10
D
C
14
13
D
G-130799-000001

BATTERY AND BATTERY BUCKET

ITEM	PART NO.	DESCRIPTION	QTY
		1 2 3 4	
1	102292356	Screw-1/4-20x56 Hwh Self Drill	4
2	102298020	Screw, K80x20, Torx Pn Hd Pt	2
3	102621501	Nut, Flange, M6 X 1.0, Nylon	6
4	N/A	Bucket, Batt, Elec	1
5	103368301	Hinge - Nested	2
6	47609833001	Nut, Locking Washer, M10	8
7	47609834001	Hook, Retention, Batt Support	2
8	47609836001	Asm, Support, Battery	1
9	47610465001	Battery, Lithium, 1p	1
10	47610843001	Mount, Vcm, Lith	1
11	47620652001	Controller, Vcm, Li, Ev2106b01	1
12	47624755001	Asm, Cover, Terminal	1
13	47630830001	Spacer, 3/8-16, Brass	2
14	47634258001	Nut, 3/8-16 Zinc, K-lock	2

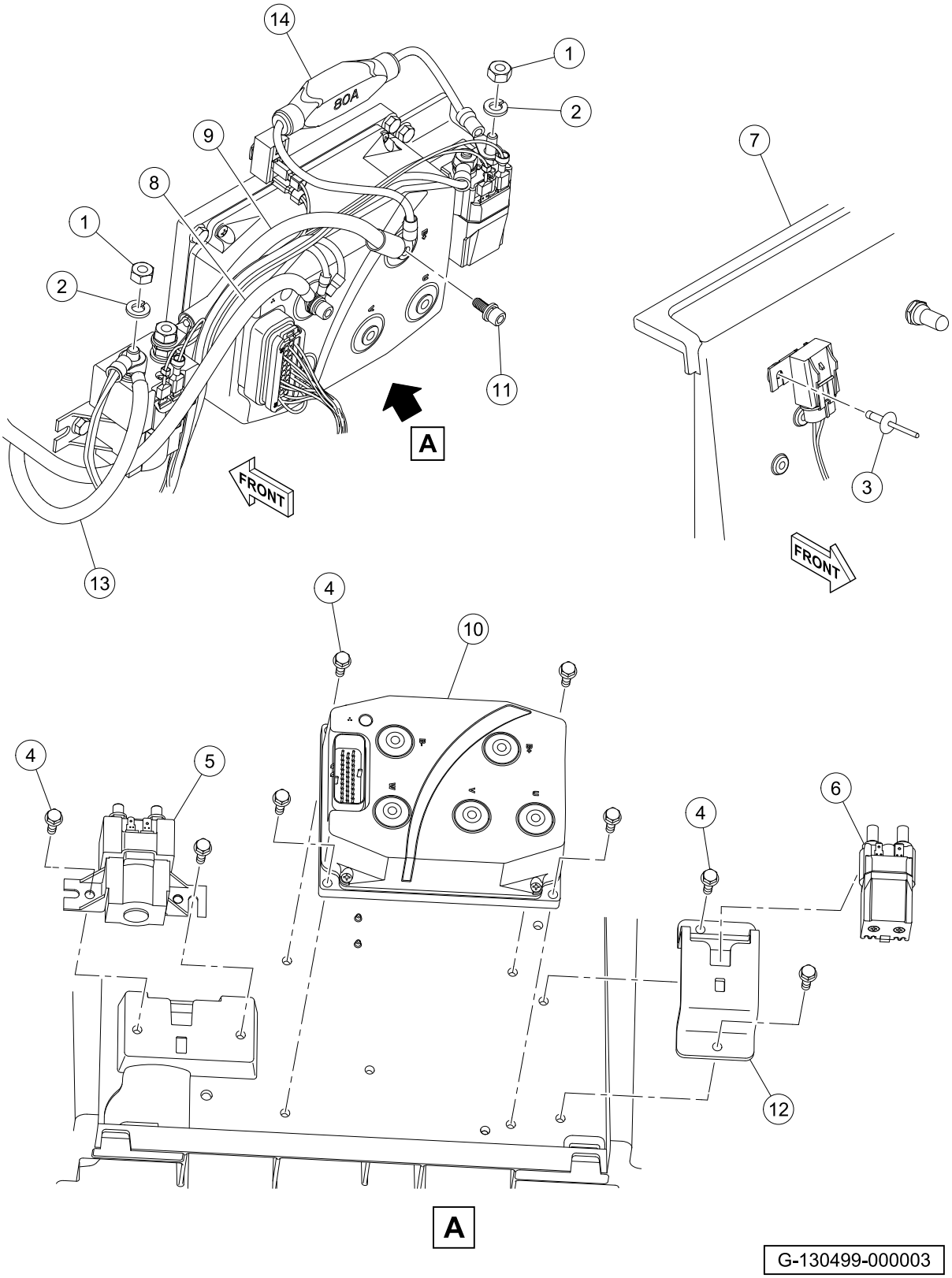
14
1
2
9
8
1
2
11
A
FRONT
13
7
3
FRONT
4
10
4
5
4
6
12
A
G-130499-000003

MODULE, CONTROLLER AND SOLENOIDS

ITEM	PART NO.	DESCRIPTION	QTY
		1 2 3 4	
1	1012528	Nut, M8-1.25 Hex	4
2	1013734	Lockwasher, 8mm Split	4
3	1015392	Rivet, 3/16 Pop	1
4	102296720	Screw, M6 X 20 Tt Hx Fl Hd	8
5	102774701	Solenoid, 48v	1
6	102865901	Solenoid 48v Slot Mt No Diode	1
7	105005001	Component Mounting Plate	1
8	47614748001	Wire, Batt, Neg, Lio	1
9	47614749001	Wire, Sol-controller (b+)	1
10	47620653001	Controller, Mtr, Ac, Li, 1532	1
11	47624326001	Scr, M6, Stl Zn, Int Hex, Sems	5
12	47624985001	Bkt, Solenoid, Su60-2122p	1
13	47632305001	Wire, B+, Li, 4ga	1
14	47642666001	Fuse, Inline, 80A, DBR	1

7

E

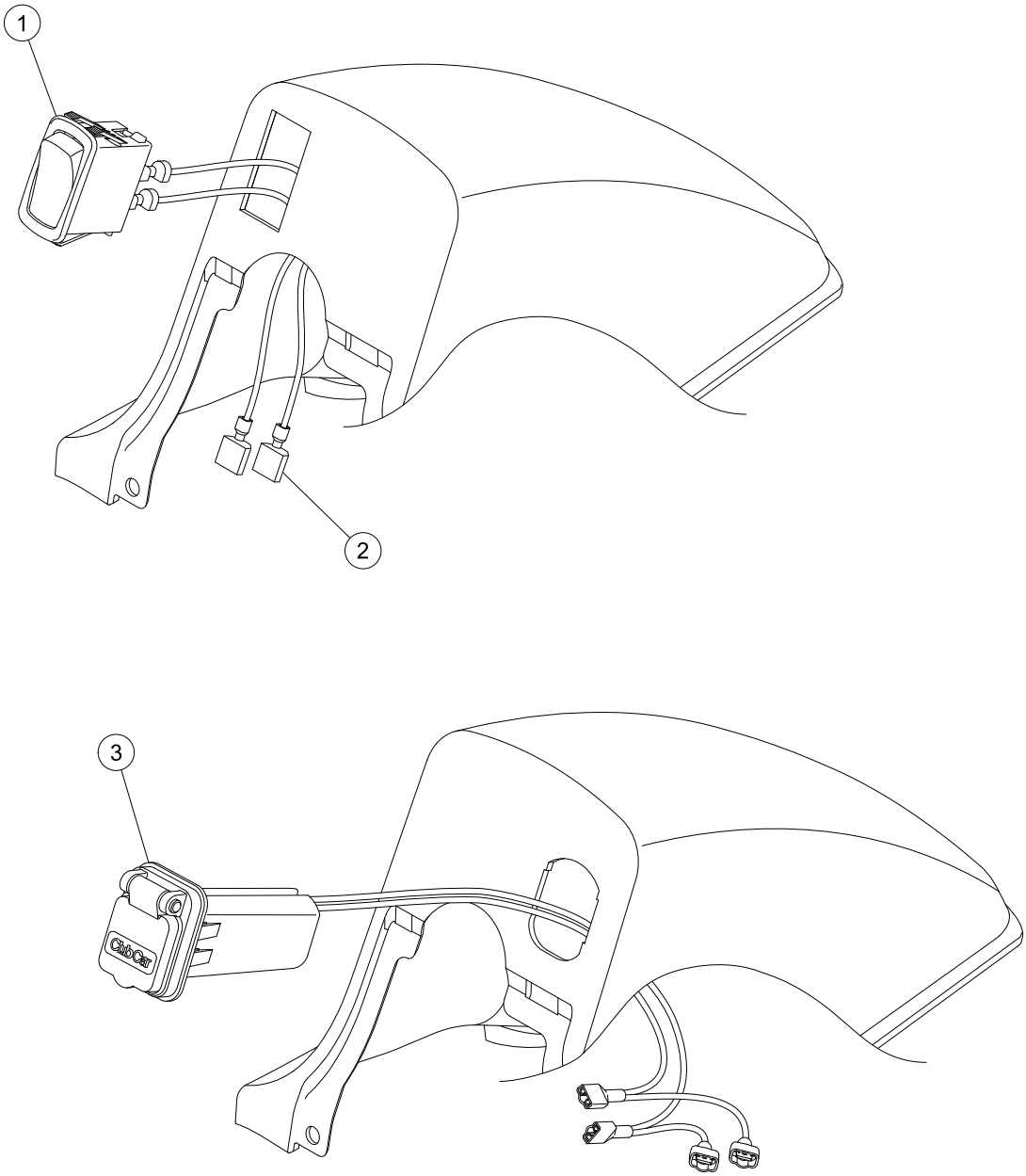

G-130599-000002

HAZARD SWITCH AND USB PORT

ITEM	PART NO.	DESCRIPTION	QTY
		1 2 3 4	
1	105146701	Switch, Hazard, 12vdc (includes item 2)	1
2	47614753001	Harness, Sub, Hazard Sw	1
3	47560030001	USB Port	1

7

E

ELECTRIC MOTOR

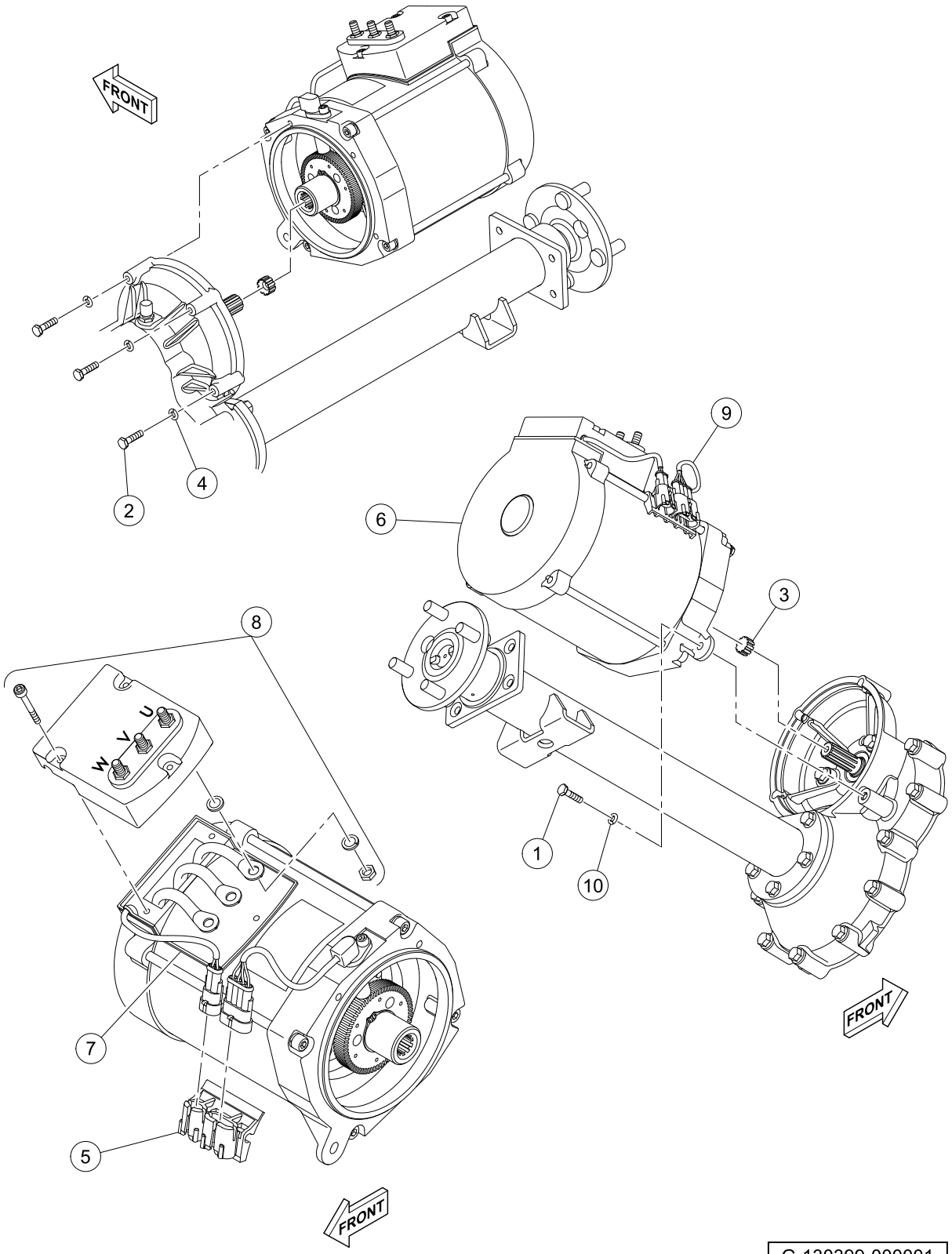
FRONT
2
4
9
6
3
8
U
V
W
1
10
7
5
FRONT
FRONT
G-130399-000001

ELECTRIC MOTOR

ITEM	PART NO.	DESCRIPTION	QTY
		1 2 3 4	
1	1010934	Screw, 5/16-18 X 1.00 Hex Cap	1
2	1014201	Screw, 1/4-20 X 2.25 Hex Cap	3
3	102235201	Bumper, Drive Unit	1
4	451	Lockwasher, 1/4 Split	3
5	47622766001	Clip, Motor Harness	1
6	47637882001	Motor, Elec, Acx-3381, W/clip	1
7	47653176001	Gasket, Terminal Block	1
8	47653176002	Kit, Terminal Block	1
9	47653176003	Kit, Speed Sensor Service	1
10	7174	Lockwasher, 5/16 Split	1

8

E

TRANSAXLE

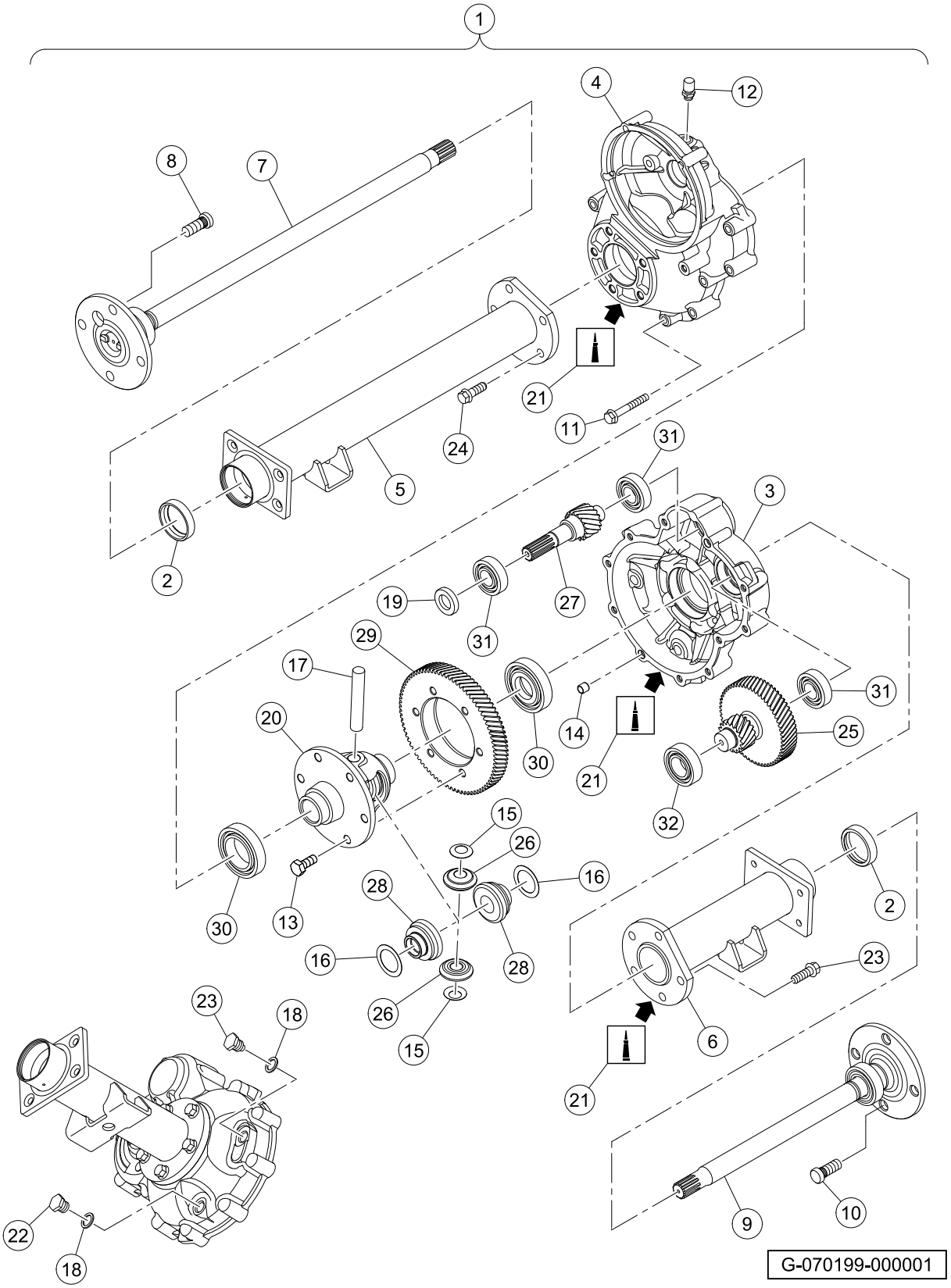
1
4
12
8
7
21
11
24
5
31
3
2
19
27
31
29
17
20
14
30
21
31
25
32
15
26
16
28
30
13
16
28
26
15
2
23
6
21
23
18
22
18
9
10
G-070199-000001

ITEM	PART NO.	DESCRIPTION	QTY
		1 2 3 4	
1	47609838001	Transaxle, Electric, 16:1 (includes items 2 through 32)	1
2	1013794	Axle Shaft Oil Seal	2
3	101895401	Gear Case, Driver-Side	1
4	101895501	Gear Case, Passenger-Side	1
5	101895601	Tube, Axle, Passenger-Side	1
6	101895701	Tube, Axle, Driver-Side	1
7	101895801	Axle Assembly, Passenger-Side (includes item 8)	1
8	101922201	Lug Stud	4
9	101895901	Axle Assembly, Driver-Side (includes item 10)	1
10	101922201	Lug Stud	4
11	101897001	Screw, M8-1.25 X 60mm Hex-Head	11
12	101897201	Breather	1
13	101897401	Screw, M10-1.25 X 25mm	6
14	101897601	Pin, 11mm OD X 8.5mm ID X 10mm	2
15	101903601	Washer, Thrust	2
16	101903701	Washer, Thrust	2
17	101922101	Pin, 15.99mm X 88.7mm Dowel	1
18	101923201	Gasket	2
19	101923501	Seal, Lip	1
20	101923601	Differential Housing	1
21	101928701	Liquid Gasket (Transaxle case)	1
22	101972101	Plug, M14-1.5 X 12mm Magnetic	1
23	101972201	Plug, M14-1.5 X 12mm Hex	1
24	101976001	Screw, M10-1.50 X 35mm Hex Cap	10
25	47649348001	Shaft Assy, Intermediate	1
26	47649349001	Gear, Differential Idler	2
27	47649350001	Shaft, Input	1
28	47649351001	Gear, Differential	2
29	47649352001	Gear, Differential Output	1
30	47649353001	Bearing, Inner Axle Tube	2
31	47649354001	Bearing	3
32	47649355001	Bearing	1

9

E

BATTERY CHARGERS

10

E

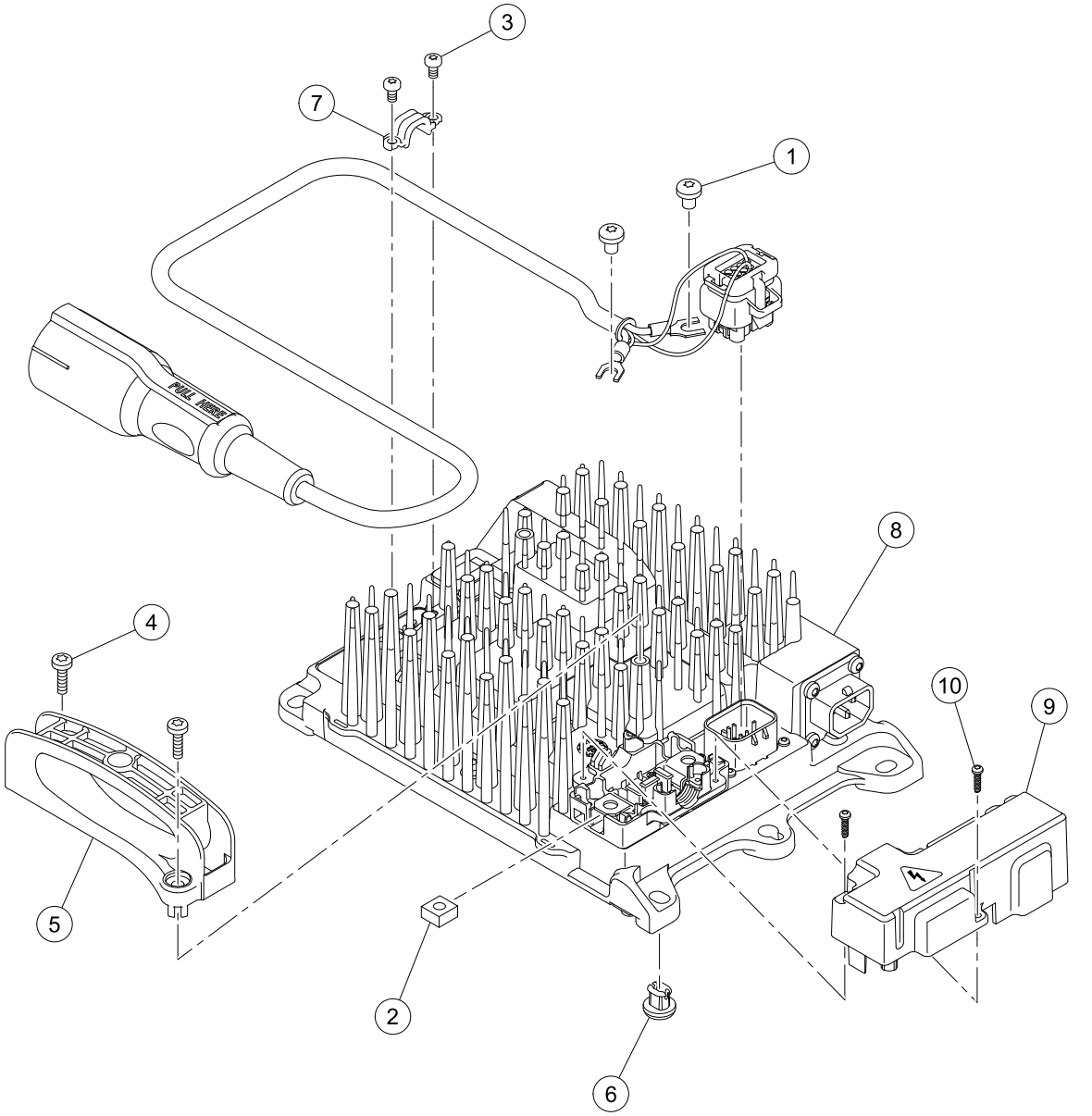

G-130899-000001

IC-650 BATTERY CHARGER – SHELF

ITEM	PART NO.	DESCRIPTION	QTY
		1 2 3 4	
1	104024501	Screw, M6, Torx Head	2
2	104024601	Nut, M6, Square, Captured	2
3	104028901	Screw, M4 X .70, Pan Hd, Torx	2
4	104029001	Screw, M5 X .80, Pan Hd, Torx	2
5	105003601	Handle, Charger, High-Freq	1
6	105003701	Foot, Charger, High-Freq	4
7	105093101	Strain Relief, High-Freq, External, Charger	1
8	47617894001	Charger, 650w Hf Li-ion	A/R
9	47637608001	Cover, Chgr, IC650, Front Exit	1
10	47639168001	Screw M3 X 12 Delta Point	2

Note: For applicable charger cords, reference the Battery Charger Cords section.

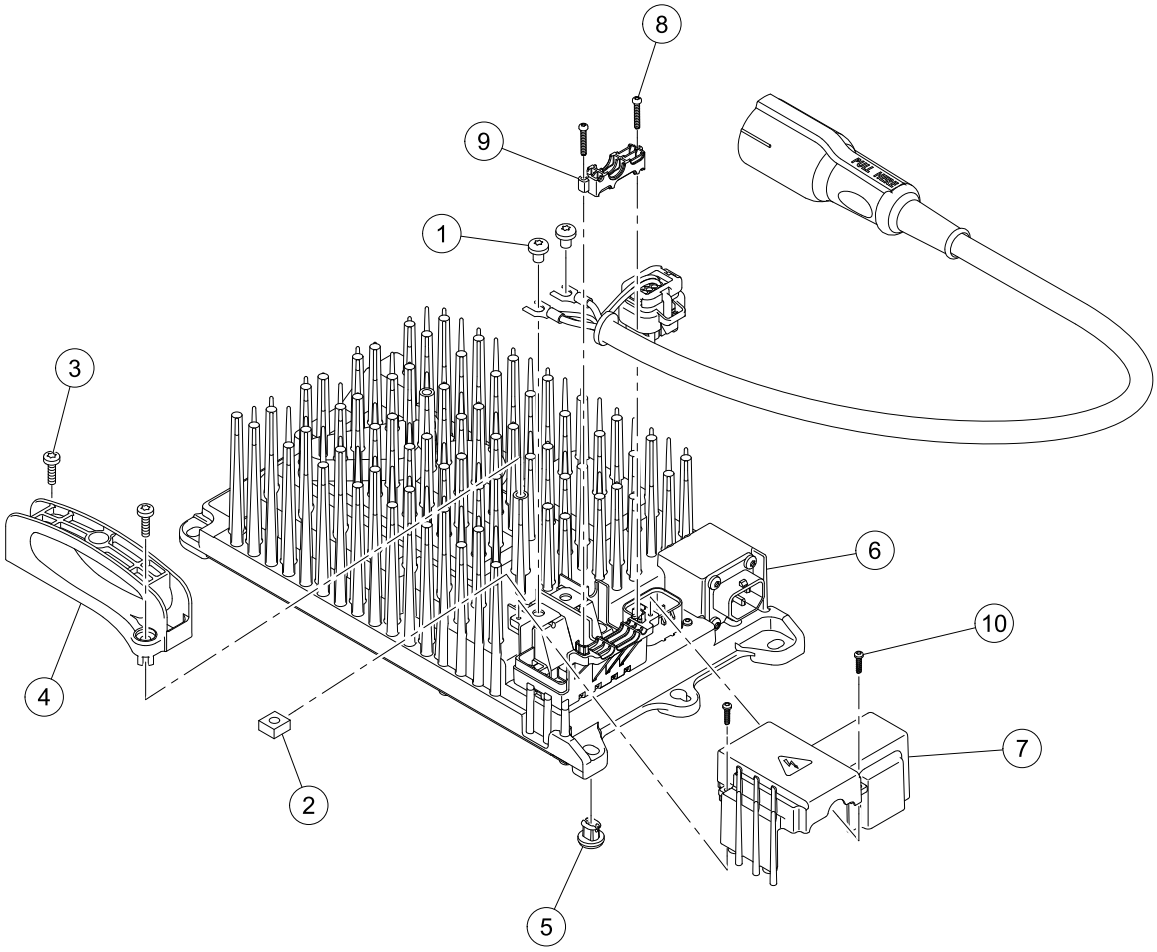

G-130899-000005

IC-900 BATTERY CHARGER – SHELF

ITEM	PART NO.	DESCRIPTION	QTY
		1 2 3 4	
1	104024501	Screw, M6, Torx Head	2
2	104024601	Nut, M6, Square, Captured	2
3	104029001	Screw, M5 X .80, Pan Hd, Torx	2
4	105003601	Handle, Charger, High-Freq	1
5	105003701	Foot, Charger, High-Freq	4
6	47617895001	Charger, 900w Hf Li-ion	A/R
7	47618743002	Cover, Charger, Ic900	1
8	47628552001	Screw M3 X 18	2
9	47628868001	Dc Cord Clamp Ic900 Chgr	1
10	47639168001	Screw M3 X 12 Delta Point	2

Note: For applicable charger cords, reference the Battery Charger Cords section.

10

E

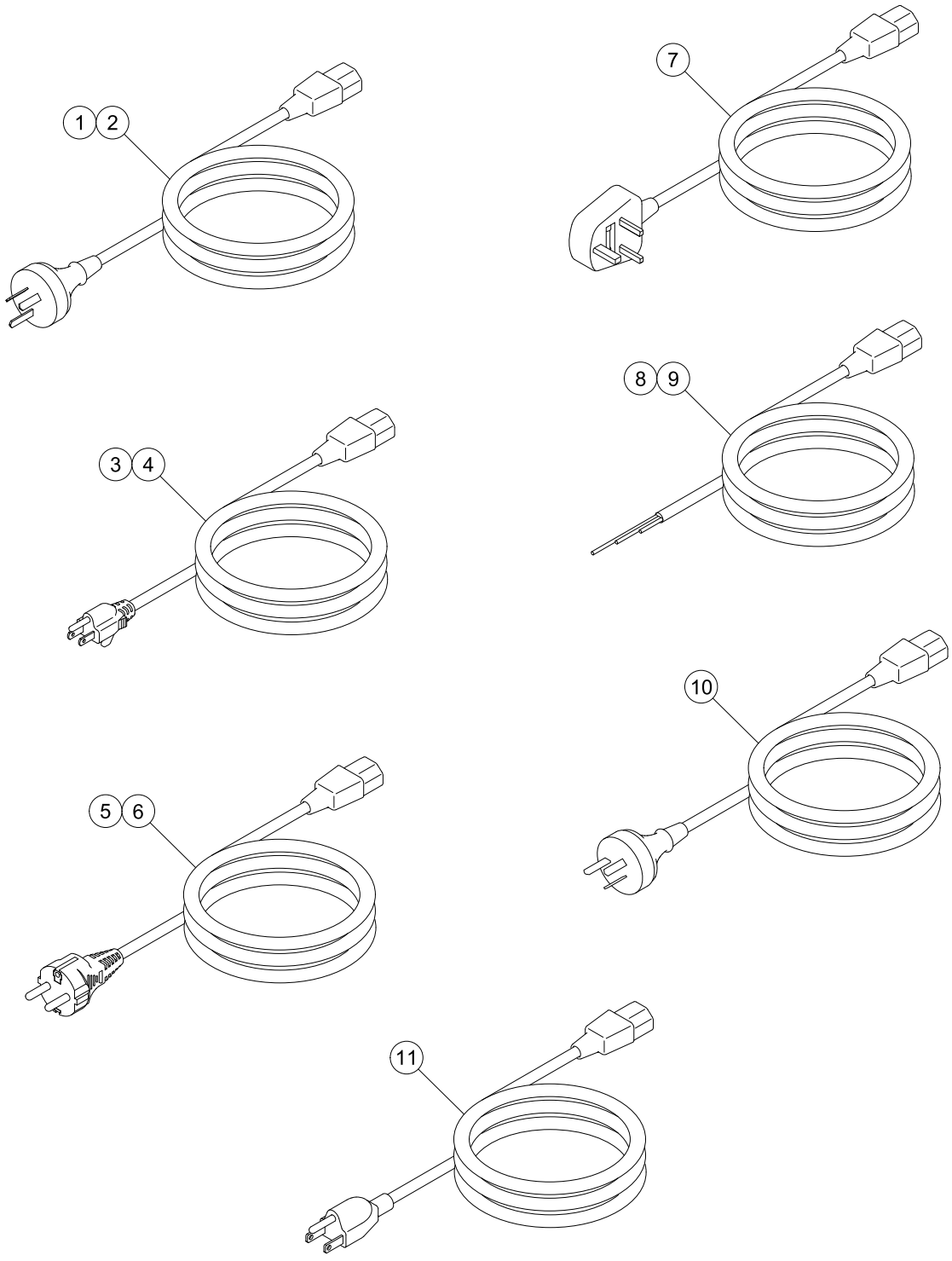

G-130899-000004

CORDS – BATTERY CHARGER, HIGH-FREQUENCY

ITEM	PART NO.	DESCRIPTION	QTY
		1 2 3 4	
1	105068201	Cord, AC, Iec320, 6ft (1.83 m), China	A/R
2	105068202	Cord, AC, Iec320, 9ft (2.74 m), China	A/R
3	105070101	Cord, DC, Yellow, 9ft (2.74 m)	A/R
4	105070102	Cord, DC, Yellow, 12ft (3.66 m)	A/R
5	105070103	Cord, DC, Yellow, 20ft (6.1 m)	A/R
6	47606837001	Cord, Ac, Iec320, 9Us'	A/R
7	47606837002	Cord, Ac, Iec320, 6Us'	A/R
8	47612314001	Cord, Ac, Iec320, 6,Eu'	A/R
9	47612314002	Cord, Ac, Iec320, 9,Eu'	A/R
10	47612315002	Cord, Ac, Iec320, 9,Gb'	A/R
11	47612316001	Cord, Ac, Iec320, 6,Non-term'	A/R
12	47612316002	Cord, Ac, Iec320, 9,Non-term'	A/R
13	47612317002	Cord, Ac, Iec320, 9,Australi'	A/R
14	47612318002	Cord,ac, Iec320, 9,Japan'	A/R

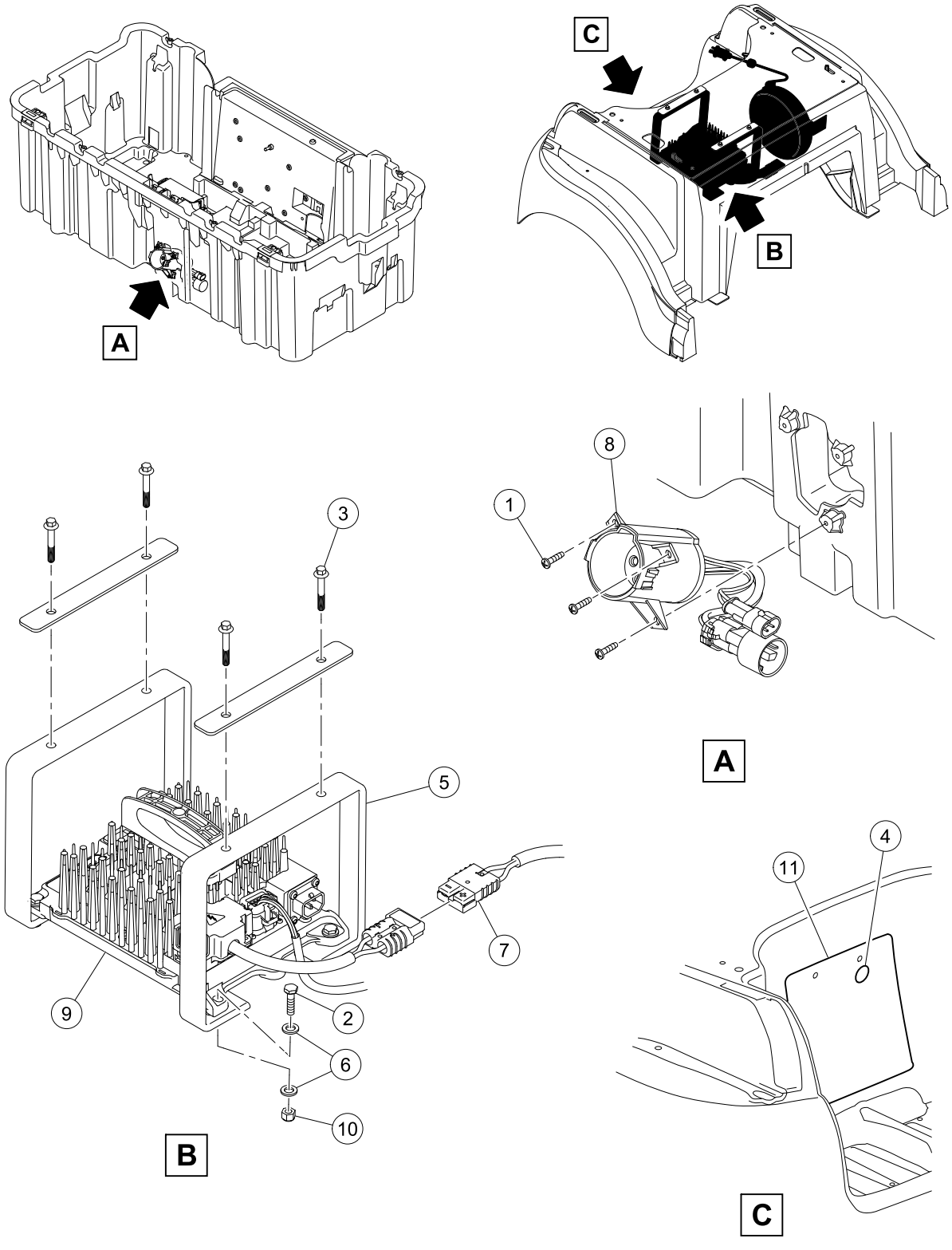
A
B
C
1
2
3
4
5
6
7
8
9
10
11
A
B
C
G-130899-000002

IC-650 BATTERY CHARGER – ONBOARD

ITEM	PART NO.	DESCRIPTION	QTY
		1 2 3 4	
1	101832001	Screw, #7-19 X 0.625 Phillips Pan-Head Tap	3
2	101861901	Screw, 1/4-20 X 1.125 Hex Cap	4
3	102541401	Bolt-m6x1.0x20 Hex Flhd Blk-l	4
4	105300801	Plug, Push In, 61/64" Diameter	1
5	105315201	Asm, Bracket, Obc Eric Mount	1
6	332	Washer, 1/4 Type A Narrow Flat	8
7	47616156001	Harness, Chg, Ob, Lio	1
8	47622531001	Receptacle, Chrg, Lio, Les	1
9	47639251001	Asm, Chrgr, Ic650, Ob	1
10	8233	Locknut, 1/4-20, Nylon Insert	4
11	SVP915201	Panel-access-lite Hole Cut Out	1

Note: For applicable battery charger cord reels, reference the Battery Charger Cord Reels section.

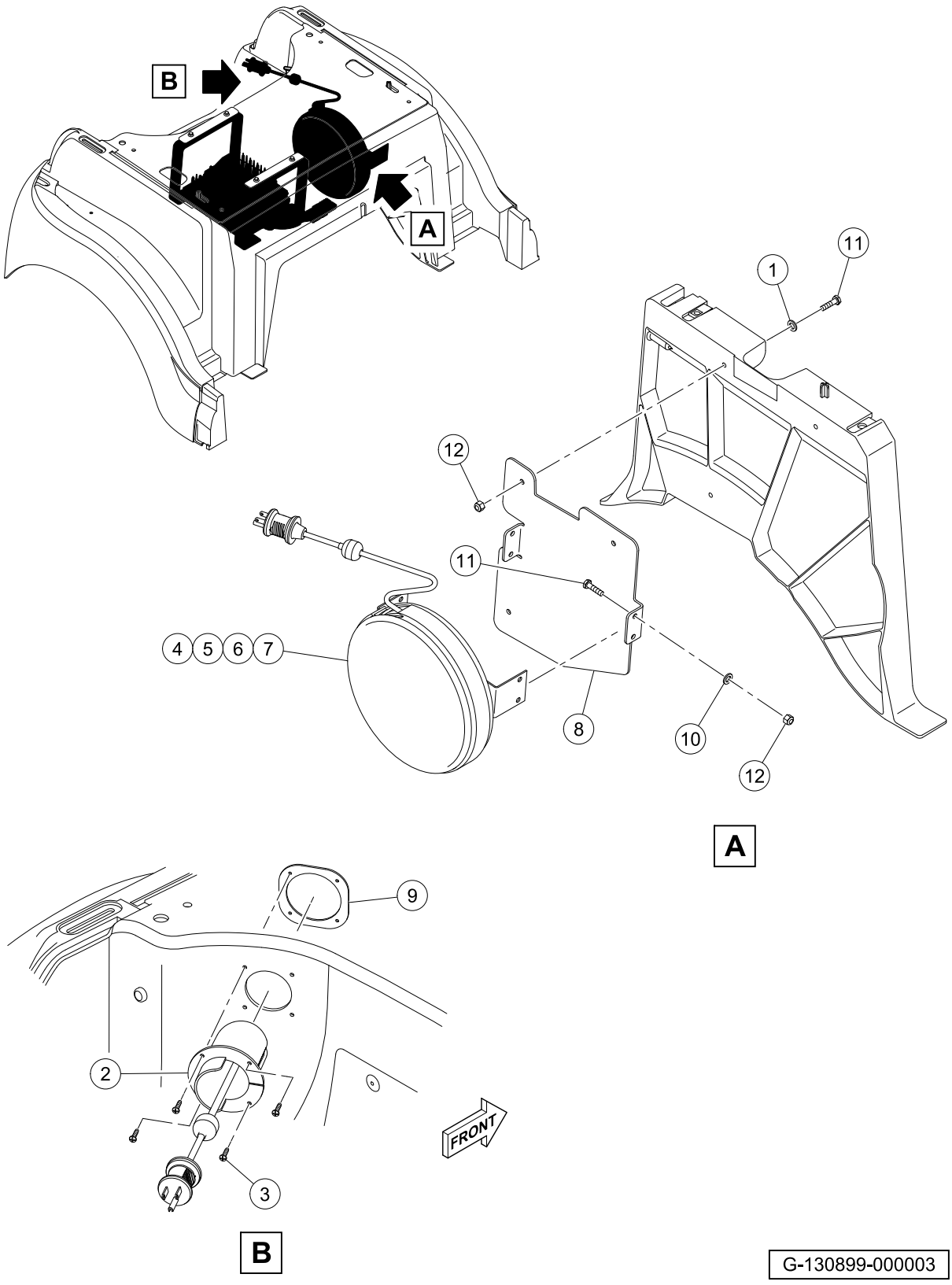
B
A
1
11
12
11
4
5
6
7
8
10
12
A
9
2
FRONT
3
B
G-130899-000003

BATTERY CHARGER CORD REELS – ONBOARD

ITEM	PART NO.	DESCRIPTION	QTY
		1 2 3 4	
1	1014306	Washer, 1/4" Type B Flat	3
2	1016673	Housing, Cord Reel	1
3	101832001	Screw, #7-19 X 0.625 Phillips Pan-Head Tap	4
4	103872701	Cord Reel, Hf Charger	A/R
5	103872702	Cord Reel, Hf Chgr, Uk	A/R
6	103872703	Cord Reel, Hf Charger, Eu	A/R
7	103872704	Cord Reel, Hf Charger, Aus	A/R
8	105299101	Plate, Cord Reel, Mtg, Unbody	1
9	105299601	Plate, Backing, Charge Port	1
10	332	Washer, 1/4 Type A Narrow Flat	4
11	7847	Screw, 1/4-20 X 0.75 Hex-Head Cap	7
12	8233	Locknut, 1/4-20, Nylon Insert	7

10

E

MAINTENANCE AND SERVICE TOOLS

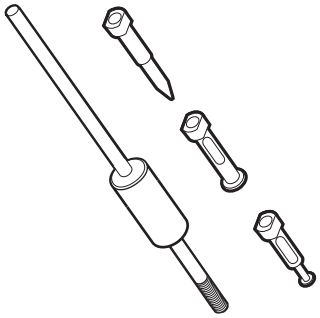

1

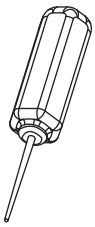

2

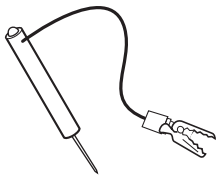

3

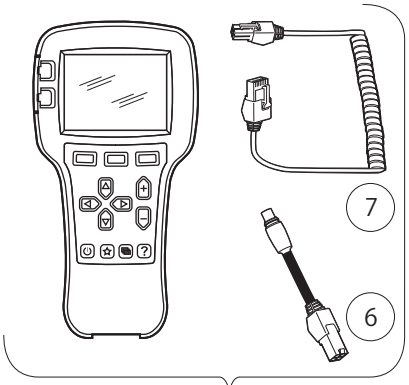

4 5 6 7

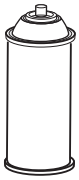

8

9

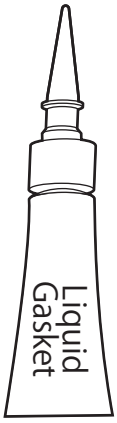

10

11

12

13

14

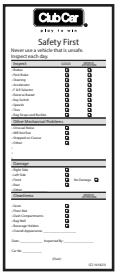

15

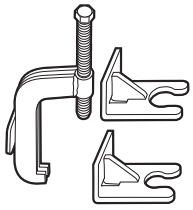

16

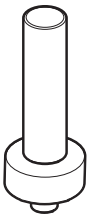

17

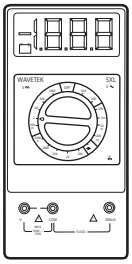

18

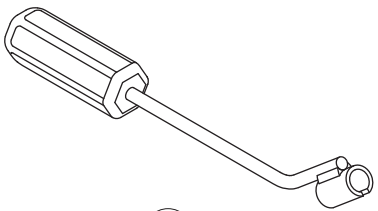

19

001060-006

ITEM	PART NO.	DESCRIPTION	QUANTITY
		1 2 3 4 The following tool list includes all tools available from Club Car for maintenance and service procedures for lithium-ion electric golf and utlity vehilces. Make sure to carefully examine the tool list for applicability to your vehicle before ordering.	
1	1016417	Bearing and Oil Seal Remover Assembly	1
2	102562401	Charger Bezel Tool	1
3	1011273	Continuity Tester	1
4	105234501	Controller Diagnostic Tool (CDT) User Kit (includes item 10)	1
5	105234502	Controller Diagnostic Tool (CDT) OEM Kit (includes items 11 and 12)	1
6	102251501	Adaptor, Cable	1
7	105209601	CDT Cable	1
8	1012151	Dry Moly Lubricant	1
9	1013593	Internal Retaining Ring Pliers	1
10	101928701	Liquid Gasket (transaxle case)	1
11	102243402	Moly-Teflon Lubricant (4-oz. (113-gram) tube)	1
12	102587201	Paint Pen, Touch-Up, Underbody , Black	1
13	1012549	Retaining Ring Pliers, 45 Degree External	1
14	1012560	Retaining Ring Pliers, 90 Degree Internal	1
15	101823101	Safety First Card (50 per pack)	1
16	102061201	Steering Wheel Puller Tool	1
17	1014161	Transaxle Pinion Seal Tool	1
18	1011480	Volt Ohm Meter	1
19	102555501	Brake Cable Release Tool	1
		Please refer to the maintenance and service manual for proper tool application.	

INDEX

Part Number and *Page*

AM10092 *1-61*
AM10682 *2-3*
AM1231201 *1-27*
AM1263401 *2-5*
AM1292101 *1-27*
SVP370601 *3-3*
SVP370701 *3-3*
SVP370801 *3-3*
SVP370901 *3-3*
SVP915201 *1-25*, *10-9*
332 *1-61*, *10-9*, *10-11*
451 *8-3*
1242 *5-5*
1620 *1-27*
7174 *8-3*
7310 *2-3*, *2-5*
7311 *1-61*
7847 *10-11*
8233 *1-61*, *10-9*, *10-11*
8990 *6-9*
1010145 *6-15*, *6-17*
1010434 *1-23*, *1-51*, *1-53*, *1-55*, *1-57*, *1-59*, *5-7*
1010436 *1-27*
1010829 *5-5*
1010934 *8-3*
1010984 *2-3*
1011273 *11-3*
1011415 *6-15*
1011480 *11-3*
1012151 *11-3*
1012180 *6-15*
1012528 *7-13*
1012549 *11-3*
1012560 *11-3*
1012565 *6-3*, *6-5*
1012566 *6-3*, *6-5*
1012571 *1-17*
1013042 *6-9*
1013164 *6-15*
1013593 *11-3*
1013734 *7-13*
1013794 *9-3*
1013857 *4-11*
1013924 *5-3*
1014161 *11-3*
1014201 *8-3*
1014306 *10-11*
1014555 *6-15*
1014902 *1-55*, *1-57*, *1-59*
1015392 *7-13*
1015583 *6-15*
101558302 *6-15*, *6-17*
101609401 *3-3*
1016154 *6-3*, *6-5*
1016214 *6-3*, *6-5*
1016417 *11-3*
1016673 *10-11*
1016849 *4-11*
1016851 *4-11*
1017041 *1-33*
101705701 *1-55*, *1-57*, *1-59*, *3-3*
1017235 *1-55*, *1-57*, *1-59*
101791101 *5-3*
101802602 *4-11*
101815501 *5-3*
101815502 *5-3*
101816501 *5-3*
101816502 *5-3*
101823101 *11-3*
101823201 *5-3*
101823801 *5-3*
101823901 *5-3*
101830701 *4-13*
101832001 *10-9*, *10-11*
101834502 *4-13*
101850301 *6-3*, *6-5*
101851101 *4-13*
101856002 *7-9*
101861901 *10-9*
101895401 *9-3*
101895501 *9-3*
101895601 *9-3*
101895701 *9-3*
101895801 *9-3*
101895901 *9-3*
101897001 *9-3*
101897201 *9-3*
101897401 *9-3*
101897601 *9-3*
101903601 *9-3*
101903701 *9-3*
101908401 *4-17*, *7-9*
101922101 *9-3*
101922201 *9-3*
101923201 *9-3*
101923501 *9-3*
101923601 *9-3*
101928701 *9-3*, *11-3*
101954301 *1-21*
101972001 *3-3*
101972101 *9-3*
101972201 *9-3*
101976001 *9-3*
101985201 *1-33*
101998501 *1-21*
102022601 *6-9*
102051901 *4-11*
102061201 *11-3*
102163001 *1-35*
102196901 *4-11*
102235201 *8-3*
102243402 *11-3*
102251501 *11-3*
102279104 *1-25*
102287101 *6-11*
102287601 *6-11*
102287701 *6-11*
102288101 *6-11*, *6-13*
102288201 *6-13*
102288401 *6-13*
102288701 *6-13*
102288801 *6-13*
102288901 *6-11*
102289001 *6-9*
102289101 *6-13*
102289201 *6-13*
102289401 *6-11*
102289501 *6-11*, *6-13*
102289601 *6-11*
102289701 *6-11*
102289801 *6-13*
102289901 *6-11*
102290120 *6-3*, *6-5*
102292101 *1-3*, *1-5*
102292201 *5-7*
102292356 *1-13*, *1-15*, *7-11*
102292701 *1-15*, *1-25*, *4-7*
102292801 *5-5*
102296020 *1-9*, *1-29*, *1-31*, *4-5*
102296140 *1-37*, *1-39*, *1-41*
102296150 *1-29*, *1-31*, *1-45*
102296301 *1-29*, *1-31*, *1-35*
102296401 *1-37*, *1-39*, *1-41*
102296530 *1-23*, *1-51*, *1-55*, *1-57*, *1-59*
102296601 *1-25*
102296720 *7-13*
102296819 *1-13*
102296920 *7-7*, *7-9*
102297001 *1-13*
102297230 *1-23*, *1-25*, *1-27*, *1-29*, *1-31*, *1-33*
102297901 *5-5*
102298020 *1-15*, *1-17*, *1-19*, *7-11*
102298030 *1-25*, *1-51*, *5-7*
102298116 *6-7*
102298130 *6-7*
102298170 *6-15*, *6-19*
102298175 *1-5*, *6-15*, *6-17*
102298240 *1-23*, *1-51*
102298401 *1-3*, *1-5*, *1-7*, *1-43*, *1-45*, *6-15*, *6-17*
102298580 *1-3*, *1-5*, *6-15*
102298601 *1-3*, *1-5*, *1-53*, *6-15*
102298716 *1-15*
102298720 *1-25*, *1-53*, *1-55*, *1-57*, *1-59*, *4-9*, *7-5*
102298745 *1-51*, *1-53*, *1-55*, *1-57*, *1-59*
102298995 *1-3*, *1-5*
102299065 *1-11*, *1-43*, *1-45*, *1-49*

INDEX

102299360 *1-43*, *1-45*
102299601 *1-43*, *1-45*
102353201 *6-13*
102353301 *6-13*
102353401 *6-13*
102357701 *6-13*
102400002 *1-49*
102400102 *1-49*
102478101 *1-29*, *1-31*
102478201 *1-31*
102500801 *5-7*
102501402 *1-25*
102501403 *1-25*
102502501 *1-9*
102504001 *1-23*
102504201 *1-23*
102504301 *1-23*
102504802 *1-15*
102505401 *1-3*, *1-5*
102505701 *1-3*, *1-5*, *6-11*
102506401 *6-15*, *6-17*
102507801 *1-3*, *1-5*
102508202 *1-19*
102508401 *7-9*
102508901 *1-37*
102508902 *1-39*
102508903 *1-41*
102511101 *4-17*, *7-9*
102511601 *1-37*
102511602 *1-39*
102511603 *1-41*
102513501 *1-43*, *1-45*
102516902 *1-19*
102517001 *1-23*
102517501 *4-9*
102517601 *4-9*
102519301 *3-3*
102521901 *1-15*
102529201 *4-9*
102531001 *1-53*, *1-55*, *1-57*, *1-59*
102531402 *1-53*, *1-55*, *1-57*, *1-59*
102531502 *1-51*, *1-55*, *1-57*, *1-59*
102534201 *1-7*, *1-53*, *1-55*, *1-57*, *1-59*
102534801 *1-55*, *1-57*, *1-59*
102535401 *4-9*
102536103 *1-33*
102538803 *1-27*
102540601 *2-5*
102540701 *2-5*
102541401 *1-27*, *1-33*, *10-9*
102541425 *1-29*, *1-31*, *1-49*, *1-51*, *1-55*, *1-57*, *1-59*
102543903 *1-11*
102544201 *1-11*, *1-43*, *1-45*, *1-49*
102551901 *5-5*
102552001 *5-5*
102555901 *3-3*
102556701 *2-5*
102556801 *2-5*
102557201 *1-13*
102559401 *5-7*
102559701 *5-7*
102559901 *2-3*
102559902 *2-3*
102562401 *11-3*
102565201 *6-9*
102566001 *6-9*
102569302 *2-3*
102569311 *2-3*
102570905 *1-55*
102570906 *1-57*
102570907 *1-59*
102572401 *4-11*
102573101 *1-51*, *1-55*, *1-57*, *1-59*
102581201 *1-49*
102582401 *1-29*, *1-31*, *1-35*
102584701 *1-53*, *1-55*, *1-57*, *1-59*
102584801 *1-53*, *1-55*, *1-57*, *1-59*
102587201 *11-3*
102588501 *6-15*, *6-17*
102588601 *6-11*
102594301 *5-5*
102594801 *5-7*
102594901 *5-7*
102595201 *5-7*
102595301 *5-7*
102595401 *5-7*
102595901 *5-7*
102596001 *5-7*
102596301 *5-7*
102621501 *1-49*, *7-11*
102670701 *6-17*
102774701 *7-13*
102865901 *7-13*
102878201 *6-13*
102915601 *1-13*
102947601 *1-35*
102956201 *6-11*, *6-13*
102967901 *1-25*
103146501 *6-19*
103196001 *1-43*, *1-45*, *1-49*
103199301 *1-49*
103200301 *1-43*, *1-45*
103205101 *1-37*, *1-39*, *1-41*
103210101 *1-37*, *1-39*, *1-41*
103286201 *1-47*
103286202 *1-47*
103286203 *1-47*
103325001 *1-7*
103327601 *1-23*
103368301 *7-11*
103380201 *5-3*
103380202 *5-3*
103384601 *3-3*
103388501 *6-11*
103402701 *1-13*
103402704 *1-13*
103451301 *1-29*, *1-31*
103451401 *1-29*, *1-31*
103451901 *1-31*
103451902 *1-31*
103451903 *1-31*
103459104 *2-3*
103483101 *5-3*
103483102 *5-3*
103483201 *5-3*
103483401 *5-3*
103483601 *5-3*
103483701 *5-3*
103528701 *5-5*
103528702 *5-5*
103535001 *5-5*
103597101 *4-3*
103624601 *1-55*, *1-57*, *1-59*
103624602 *1-55*, *1-57*, *1-59*
103635201 *1-15*
103638601 *6-13*
103638701 *6-13*
103638702 *6-13*
103638801 *6-13*
103638901 *1-3*, *1-5*
103653001 *1-51*, *1-55*, *1-57*, *1-59*
103653201 *1-49*
103662801 *1-27*
103677101 *1-35*
103679701 *6-9*
103694501 *2-3*
103699401 *1-23*
103724501 *6-5*
103724503 *6-3*
103724601 *6-3*, *6-5*
103724901 *6-3*, *6-5*
103725701 *1-49*
103742303 *1-55*, *1-57*, *1-59*
103742304 *6-17*
103742305 *6-15*
103750001 *1-43*, *1-45*, *1-49*
103750101 *1-43*, *1-45*, *1-49*
103754901 *1-35*
103774801 *1-43*
103777601 *5-7*
103783001 *3-3*, *6-3*, *6-5*
103783002 *6-3*, *6-5*
103783003 *6-3*
103796701 *6-3*
103812901 *1-25*
103813001 *1-25*
103816401 *1-49*

INDEX

103816402 *1-49*
103826201 *6-9*
103826301 *6-9*
103832401 *2-5*
103832901 *1-21*
103833601 *1-21*
103833701 *1-21*
103833801 *1-21*
103833901 *1-21*
103853121 *1-23*, *1-51*, *1-55*
103853122 *1-23*, *1-51*, *1-57*
103853124 *1-23*, *1-51*, *1-59*
103853125 *1-23*, *1-51*
103866801 *1-51*
103866802 *1-51*
103866901 *1-51*, *1-55*, *1-57*, *1-59*
103866902 *1-51*, *1-55*, *1-57*, *1-59*
103872701 *10-11*
103872702 *10-11*
103872703 *10-11*
103872704 *10-11*
103874111 *5-7*
103874112 *5-7*
103886801 *1-33*
103921601 *6-15*
103921602 *6-15*
103922401 *1-53*, *1-55*, *1-57*, *1-59*
103926603 *1-3*
103929301 *1-23*
103929302 *1-23*
103934901 *2-5*
103935001 *2-5*
103935601 *6-13*
103943401 *5-7*, *7-3*
103948902 *1-5*
103951001 *2-3*
103951002 *2-3*
103951007 *2-3*
103952901 *1-23*
103964901 *6-15*
103965001 *1-5*, *6-15*
103974901 *5-7*
103975011 *5-7*
103975012 *5-7*
103978801 *1-23*
103990501 *1-3*
103990503 *1-5*
103990601 *1-3*, *1-5*
103994101 *1-27*
104008001 *1-37*
104008002 *1-39*
104008003 *1-41*
104008503 *1-45*
104023421 *1-21*
104023422 *1-21*
104023424 *1-21*
104023425 *1-21*
104024501 *10-3*, *10-5*
104024601 *10-3*, *10-5*
104028901 *10-3*
104029001 *10-3*, *10-5*
105003601 *10-3*, *10-5*
105003701 *10-3*, *10-5*
105005001 *7-13*
105005402 *1-17*
105049001 *6-7*
105068001 *4-13*
105068002 *4-13*
105068201 *10-7*
105068202 *10-7*
105070101 *10-7*
105070102 *10-7*
105070103 *10-7*
105082001 *4-13*
105082002 *4-13*
105093101 *10-3*
105101221 *1-51*, *1-55*
105101222 *1-51*, *1-57*
105101224 *1-51*, *1-59*
105101225 *1-51*
105114804 *7-7*
105114806 *7-7*
105116301 *5-7*, *7-3*
105142401 *2-3*
105146701 *7-15*
105187901 *6-13*
105188185 *6-15*, *6-17*
105188701 *6-17*
105209601 *11-3*
105223321 *1-21*
105223322 *1-21*
105223323 *1-21*
105223324 *1-21*
105223325 *1-21*
105223326 *1-21*
105223327 *1-21*
105223328 *1-21*
105223329 *1-21*
105223421 *1-23*
105223422 *1-23*
105223423 *1-23*
105223424 *1-23*
105223425 *1-23*
105223426 *1-23*
105223427 *1-23*
105223428 *1-23*
105223429 *1-23*
105234501 *11-3*
105234502 *11-3*
105284001 *1-29*
105288901 *1-61*
105289701 *1-35*
105291501 *1-15*
105291701 *1-29*
105291702 *1-29*
105291703 *1-29*
105299101 *10-11*
105299601 *10-11*
105300801 *10-9*
105313801 *1-61*
105314001 *1-15*
105314101 *1-15*
105315201 *10-9*
4 pass conversion kit, beige *1-55*
4 pass conversion kit, gray *1-59*
4 pass conversion kit, white *1-57*
47542195001 *5-3*
47542667001 *1-35*
47542667002 *1-35*
47542668001 *1-35*
47542668002 *1-35*
47559264001 *1-45*
47559264002 *1-45*
47559265001 *1-45*
47559265002 *4-17*
47559268001 *1-45*
47560030001 *7-15*
47564888021 *1-51*
47564888022 *1-51*
47564888023 *1-51*
47564888024 *1-51*
47564888025 *1-51*
47564888026 *1-51*
47564888027 *1-51*
47564888028 *1-51*
47564888029 *1-51*
47564889021 *1-51*
47564889022 *1-51*
47564889023 *1-51*
47564889024 *1-51*
47564889025 *1-51*
47564889026 *1-51*
47564889027 *1-51*
47564889028 *1-51*
47565234007 *4-5*
47565234008 *4-5*
47576196001 *6-17*
47576649001 *6-19*
47576650001 *6-19*
47576651001 *6-19*
47576652001 *6-19*
47576652002 *6-19*
47577864001 *6-19*
47577865001 *6-19*
47579096001 *6-15*, *6-17*
47583296001 *3-3*
47583296002 *3-3*
47583297001 *3-3*

INDEX

47583297002 *3-3*
47583666001 *6-17*
47586191001 *3-3*
47589916201 *1-9*
47589916202 *1-9*
47589916203 *1-9*
47589916204 *1-9*
47589916205 *1-9*
47589916206 *1-9*
47589916207 *1-9*
47589916208 *1-9*
47589916209 *1-9*
47589916210 *1-9*
47589916301 *1-9*
47589916302 *1-9*
47589916303 *1-9*
47589916304 *1-9*
47589916305 *1-9*
47589916306 *1-9*
47589916307 *1-9*
47589917001 *1-9*
47589918001 *1-7*
47589919201 *1-25*
47589919202 *1-25*
47589919203 *1-25*
47589919204 *1-25*
47589919205 *1-25*
47589919206 *1-25*
47589919207 *1-25*
47589919208 *1-25*
47589919209 *1-25*
47589919210 *1-25*
47589919301 *1-25*
47589919302 *1-25*
47589919303 *1-25*
47589919304 *1-25*
47589919305 *1-25*
47589919306 *1-25*
47589919307 *1-25*
47589920001 *1-43*, *1-45*
47589920002 *1-43*, *1-45*
47589922001 *1-11*
47589922002 *1-11*
47593000001 *1-9*
47593001001 *4-5*
47593001002 *4-5*
47593002001 *4-5*
47593002002 *4-5*
47594727001 *4-15*
47597567001 *2-5*
47599907001 *6-17*
47599908001 *6-17*
47603573001 *2-5*
47604926001 *1-7*
47605157001 *2-5*
47605992001 *7-7*
47605993001 *7-7*
47606837001 *10-7*
47606837002 *10-7*
47609283001 *4-7*
47609833001 *7-11*
47609834001 *7-11*
47609836001 *7-11*
47609838001 *9-3*
47610465001 *7-11*
47610843001 *7-11*
47612314001 *10-7*
47612314002 *10-7*
47612315002 *10-7*
47612316001 *10-7*
47612316002 *10-7*
47612317002 *10-7*
47612318002 *10-7*
47613526001 *1-45*
47613526002 *1-45*
47614268001 *7-7*
47614573001 *3-3*
47614573002 *3-3*
47614573003 *3-3*
47614573004 *3-3*
47614573005 *3-3*
47614573006 *3-3*
47614736001 *4-11*
47614742001 *7-7*
47614743001 *7-7*
47614744001 *7-7*
47614748001 *7-13*
47614749001 *7-13*
47614750001 *7-7*
47614753001 *7-15*
47614807001 *7-7*
47616156001 *10-9*
47616158001 *7-7*
47617894001 *10-3*
47617895001 *10-5*
47618108001 *4-17*
47618743002 *10-5*
47618753001 *7-7*
47618861001 *4-17*
47619337001 *7-7*
47620652001 *3-3*, *7-11*
47620653001 *7-13*
47622531001 *10-9*
47622766001 *8-3*
47624326001 *7-13*
47624328001 *3-3*
47624651001 *3-3*
47624755001 *7-11*
47624985001 *7-13*
47625005001 *1-45*
47625026001 *4-17*
47628552001 *10-5*
47628717001 *3-3*
47628868001 *10-5*
47630830001 *7-11*
47631086001 *7-5*
47631293001 *4-17*
47631631001 *4-11*
47631631002 *4-11*
47631631003 *4-11*
47632305001 *7-13*
47634258001 *7-11*
47636253001 *7-5*
47637608001 *10-3*
47637882001 *8-3*
47638185001 *1-45*
47638453001 *1-45*
47639168001 *10-3*, *10-5*
47639251001 *10-9*
47642157001 *3-3*
47642666001 *7-13*
47643352001 *4-19*
47643352002 *4-19*
47644702001 *7-5*
47649348001 *9-3*
47649349001 *9-3*
47649350001 *9-3*
47649351001 *9-3*
47649352001 *9-3*
47649353001 *9-3*
47649354001 *9-3*
47649355001 *9-3*
47653176001 *8-3*
47653176002 *8-3*
47653176003 *8-3*
96704176 *4-15*

A

A-arm, three-piece *6-11*
absorber, front shock *6-11*
absorber, rear shock *6-15*, *6-17*
AC cord *10-7*
accelerator pedal *5-7*
access panel *1-25*
adapter
  cable (IQDM) *11-3*
armrest *1-21*
assembly
  brake lever *5-3*
axle *9-3*
axle shaft oil seal *9-3*
axle tube *9-3*

B

backing plate, brake *5-3*
backrest, beige *1-23*, *1-51*, *1-55*
backrest, black *1-23*, *1-51*

INDEX

backrest, gray *1-23*, *1-51*, *1-59*
backrest, white *1-23*, *1-51*, *1-57*
bag hoop *1-23*
bag strap *1-23*
bag strap buckle *1-23*
ball joint, inner *6-9*
barrel, plastic *1-23*, *1-51*, *1-53*, *1-55*, *1-57*, *1-59*, *5-7*
Base, PDM *7-7*
basket *1-45*
battery bucket *7-11*
Bearing *9-3*
bearing and oil seal remover *11-3*
bellows, steering *6-9*
body
  under *1-15*, *1-25*
body kick plate *1-17*
body kick plate (ele) *1-19*
bolt, U- *1-55*, *1-57*, *1-59*
boot, switch *4-17*, *7-9*
bottle, sand *1-31*
bracket
  canopy support *1-43*, *1-45*
  clamshell *1-15*
  equalizer *5-5*
  jounce bumper *1-55*, *1-57*, *1-59*
  seat support *1-51*
  shock mounting, drv *6-15*
  shock mounting, pas *6-15*
Bracket, DBR *7-5*
brake adjusting mechanism *5-3*
brake backing plate *5-3*
brake cable *5-5*
brake cluster *5-3*
brake drum *5-3*
brake lever *5-3*
brake pedal *5-7*
brake rod *5-7*
brake self-adjusting mechanism *5-3*
brake shoe *5-3*
brake spring *5-3*
breather *9-3*
brow cap *1-9*
bucket, battery *7-11*
bucket, sand *1-33*
buckle, bag strap *1-23*
bumper
  drive unit (motor) *8-3*
  jounce *1-55*, *1-57*, *1-59*, *6-17*
  rubber *1-27*
Bumper, Shock Plug *1-7*
bushing *6-11*, *6-13*, *6-19*
  urethane *6-15*, *6-17*
buzzer, reverse *4-11*

C

cable
  brake *5-5*
canopy *1-37*, *1-39*
canopy drain cover *1-37*, *1-39*, *1-41*
canopy handle *1-37*, *1-39*
canopy strut, front, lh *1-43*, *1-45*, *1-49*
canopy strut, front, rh *1-43*, *1-45*, *1-49*
canopy support *1-43*, *1-45*
canopy support bracket, drv *1-23*
canopy support bracket, pas *1-23*
canopy support cover, drv *1-49*
canopy support cover, pas *1-49*
cap
  dust *4-11*
  front hub *6-13*
  key switch *4-13*
cap, hub, 7 prong *2-3*
cap, SAM *1-11*
card, safety first *11-3*
case
  gear *9-3*
charger bezel tool *11-3*
clamp
  leaf spring *6-13*
clamshell bracket *1-15*
clip *4-17*
  body trim *1-15*, *1-25*, *4-7*
clip, score card *6-3*, *6-5*
cluster, brake *5-3*
comfort grip steering wheel *6-3*
comfort grip steering wheel kit *6-3*
component mounting plate *7-13*
continuity tester *11-3*
controller diagnostic tool (CDT) *11-3*
controller diagnostic tool (CDT) cable *11-3*
conversion kit,4 pass, beige *1-55*
conversion kit,4 pass, gray *1-59*
conversion kit,4 pass, white *1-57*
cord reel *10-11*
cord set, DC *10-7*
cord, AC *10-7*
Cover *10-3*
cover
  canopy drain *1-37*, *1-39*, *1-41*
  dust *5-3*
  support, canopy, drv *1-49*
  support, canopy, pas *1-49*
Cover, PDM *7-7*
cover, steering column *4-9*
cushion, shock absorber *6-15*, *6-17*

D

dash *1-13*
dash support assembly *1-3*, *1-5*, *6-11*
DC cord set *10-7*
Decal *3-3*
decal
  box bed warning *3-3*
  crush area warning *3-3*
  four-passenger warning *1-55*, *1-57*, *1-59*, *3-3*
  operating instructions *3-3*, *6-3*, *6-5*
  private speed mode *3-3*
  rollover warning *3-3*
  water exposure *3-3*
differential housing *9-3*
drain channel *1-13*
drain plug *1-27*
drive unit bumper *8-3*
drum, brake *5-3*
dry moly lubricant *11-3*
dust cap *4-11*
dust cover *5-3*
dust seal *6-9*

E

end, tie rod *6-9*
equalizer *5-5*

F

floor cover plate *5-7*
floormat *1-15*
floormat, 4 pass, rear *1-53*, *1-55*, *1-57*, *1-59*
FNR housing *7-9*
foot deck *1-53*, *1-55*, *1-57*, *1-59*
front hub *6-13*
front suspension structure *6-11*
fuse, mini,10A *7-7*

G

Gasket *8-3*
gasket
  liquid *9-3*, *11-3*
  plug *9-3*
  seat *1-21*
Gear *9-3*
gearcase *9-3*
grip, pencil *6-3*, *6-5*

H

hand rail *1-53*, *1-55*, *1-57*, *1-59*
handle, canopy *1-39*
harness, wire *4-9*
hinge *7-11*
  seat bottom *1-21*
hinge, seat bottom *1-21*
hip restraint *1-21*
hip restraint, 4 pass *1-51*, *1-55*, *1-57*, *1-59*
hoop, bag *1-23*

INDEX

horn *4-9*
housing
  differential *9-3*
hub *6-13*
hub cap *2-3*, *6-13*
hub cap, 7 prong *2-3*
hub, front *6-13*

I

inner ball joint *6-9*
internal retaining ring pliers *11-3*
isolator, shock damper *6-15*, *6-17*

J

J-clip *1-3*, *1-5*, *1-53*, *6-15*
jounce bumper *1-55*, *1-57*, *1-59*, *6-17*
jounce bumper bracket *1-55*, *1-57*, *1-59*

K

key switch cap *4-13*
kick plate *1-17*
kick plate (ele) *1-19*
king pin *6-13*
kit
  4 pass conversion, beige *1-55*
  4 pass conversion, gray *1-59*
  4 pass conversion, white *1-57*
  ball joint, inner *6-9*
  bellows, steering, sona *6-9*
  brake cable *5-5*
  brake shoe retainer *5-3*
  comfort grip steering wheel *6-3*
  controller diagnostic tool (CDT) *11-3*
  front hub replacement *6-13*
  hub cap *2-3*
  SAM assembly *1-23*
  seat bottom *1-21*
  shock absorber *6-15*
  shock absorber cushion *6-15*
  shoe retainer *5-3*
  windshield *1-35*
Kit, Speed Sensor *8-3*
Kit, Terminal Block *8-3*
knob, light switch *4-11*

L

leaf spring, rear *6-15*, *6-17*
leaf spring, rear, 4-pass *1-55*, *1-57*, *1-59*
light switch *4-11*
light switch knob *4-11*
liquid gasket *9-3*, *11-3*
lubricant, dry moly *11-3*
lubricant, moly-teflon *11-3*
lug nut *2-3*, *2-5*
lug stud *6-13*, *9-3*

M

mat, floor *1-15*
MCOR *5-7*, *7-3*
mechanism, brake adjusting *5-3*
meter, volt ohm *11-3*
mirror *1-61*
moly-teflon lubricant *11-3*
motor bumper *8-3*
mounting plate, component *7-13*

N

nut, lug *2-3*, *2-5*

P

paint, underbody (black) *11-3*
panel
  access *1-25*
  SAM *1-23*
panhard *6-19*
park brake release, anod *5-7*
pedal, accelerator *5-7*
pedal, brake *5-7*
pencil grip *6-3*, *6-5*
pin
  bow tie locking *5-5*
  clevis *5-5*
  king *6-13*
plate
  backing (brake) *5-3*
  component mounting *7-13*
  floor cover *5-7*
  kick *1-17*
  kick(ele) *1-19*
pliers
  internal retaining ring *11-3*
  retaining ring *11-3*
plug, drain *1-27*

R

rack and pinion *6-9*
rear underbody support *1-23*
reel cord *10-11*
reflector *3-3*
release, anod park brake *5-7*
remover, bearing and oil seal *11-3*
Resistor, DBR *7-5*
restraint, hip, 4 pass *1-51*, *1-55*, *1-57*, *1-59*
retainer
  brake shoe *5-3*
  shock absorber cushion *6-15*, *6-17*
retaining ring pliers *11-3*
reverse buzzer *4-11*
rim (wheel) *2-3*, *2-5*
Rivet, Removable *1-25*
rocker switch *7-9*
rod
  brake *5-7*
rubber bumper *1-27*

S

safety first card *11-3*
SAM (structural accessory module) *1-23*
SAM assembly kit *1-23*
SAM cap *1-11*
SAM panel *1-23*
sand bottle *1-31*
sand bucket *1-33*
sand scoop *1-33*
scoop, sand *1-33*
score card clip *6-3*, *6-5*
score card plate *6-3*, *6-5*
seal
  dust *6-9*
  lip *9-3*
  oil *9-3*
sealant *9-3*
seat back, beige *1-23*, *1-51*, *1-55*
seat back, black *1-23*, *1-51*
seat back, gray *1-23*, *1-51*, *1-59*
seat back, white *1-23*, *1-51*, *1-57*
seat bottom kit *1-21*
seat bracket *1-51*, *1-55*, *1-57*, *1-59*
seat gasket *1-21*
seat hinge *1-21*
seat support bracket *1-51*
seat support weldment *1-51*
Shaft *9-3*
Shaft Assy *9-3*
shield, debris aux *5-7*
shield, debris primary *5-7*
shock absorber (front) *6-11*
shock absorber (rear) *6-15*, *6-17*
shock absorber cushion *6-15*, *6-17*
shock absorber cushion retainer *6-15*, *6-17*
shock damper isolator *6-15*, *6-17*
shock mounting bracket, drv *6-15*
shock mounting bracket, pas *6-15*
shoe retainer kit *5-3*
shoe, brake *5-3*
sleeve *6-11*, *6-13*, *6-15*, *6-17*, *6-19*
solenoid *7-13*
spindle *6-13*
spring
  brake *5-3*
  compression *6-3*, *6-5*
spring, leaf, rear *6-15*, *6-17*
spring, leaf, rear, 4-pass *1-55*, *1-57*, *1-59*
steering column cover *4-9*
steering wheel *6-3*, *6-5*
steering wheel (comfort grip) kit *6-3*
steering wheel puller tool *11-3*

INDEX

stem, valve *2-3*, *2-5*
strap, bag *1-23*
strut, angle, tie *1-51*, *1-55*, *1-57*, *1-59*
strut, front canopy, lh *1-43*, *1-45*, *1-49*
strut, front canopy, rh *1-43*, *1-45*, *1-49*
stud
  lug *6-13*, *9-3*
support, canopy *1-43*, *1-45*
support, underbody, rear *1-23*
suspension, front structure *6-11*
switch
  light *4-11*
  rocker *7-9*
  Tow/Run *4-17*, *7-9*
  turn signal *4-9*
switch rubber boot *4-17*, *7-9*
switch,hazzard *7-15*

T

Taillight *4-19*
tester, continuity *11-3*
three-piece A-arm *6-11*
throttle, Gen2, no sensor *5-7*
tie rod end *6-9*
tie wrap *6-9*
tire *2-3*
tire, pro tour, 205-50 x 10 *2-5*
tool
  charger bezel *11-3*
  steering wheel puller *11-3*
  transaxle pinion seal *11-3*
touch-up paint *11-3*
Tow/Run switch *4-17*, *7-9*
transaxle pinion seal tool *11-3*
Tuflok *1-25*
turn signal switch *4-9*

U

U-bolt *1-55*, *1-57*, *1-59*, *6-15*, *6-17*
underbody *1-15*
underbody support, rear *1-23*
underbody, rear *1-25*
urethane bushing *6-15*, *6-17*
USB
  port *7-15*
USB port *7-15*

V

valve stem *2-3*, *2-5*
volt ohm meter *11-3*

W

wheel *2-3*, *2-5*
  steering *6-3*, *6-5*
windshield *1-35*
windshield channel *1-35*
wire harness *4-9*
wrap, tie *6-9*

Ingersoll Rand
Industrial Technologies

Club Car®

Club Car, Inc.
P.O. Box 204658
Augusta, GA 30917-4658
USA

Web www.clubcar.com
Phone 1.706.863.3000
1.800.ClubCar
Int'l +1 706.863.3000
Fax 1.706.863.5808